torcUP™

THE RIGHT TOOL FOR THE JOB

RPA-RAGB

RP/VT RIGHT ANGLE GEARBOX

RAPTOR

Pneumatic Torque Wrench

MODEL NUMBER	RP-1000-1	RP-1000	RP-2000	RP-3000	RP-6000
SQUARE DRIVE	3/4″	1″	1″	1″	1 1/2″
HEIGHT (in/mm)	9.10 / 231.2	9.10 / 231.2	9.84 / 250.0	12.08 / 306.8	12.75 / 323.9
LENGTH (in/mm)	8.04 / 204.2	8.04 / 204.2	8.04 / 204.2	8.04 / 204.2	8.04 / 204.2
WIDTH (in/mm)	3.32 / 84.3	3.32 / 84.3	3.32 / 84.3	3.32 / 84.3	3.32 / 84.3
WEIGHT w/o Arm (lbs/kg)	16.1 / 7.3	16.1 / 7.3	20.1 / 9.1	24.0 / 10.9	40.1 / 18.1
WEIGHT w/ ARM (lbs/kg)	18.2 / 7.9	19 / 8.5	23 / 10.3	26.9 / 12.1	47.9 / 25.9

VOLTA™

Battery Torque Wrench

MODEL NUMBER	VT-1000-1	VT-1000	VT-2000	VT-3000	VT-6000
SQUARE DRIVE	3/4″	1″	1″	1″	1 1/2″
HEIGHT (in/mm)	9.10 / 231.2	9.10 / 231.2	9.84 / 250.0	12.08 / 306.8	12.75 / 323.9
LENGTH (in/mm)	8.88 / 225.6	8.88 / 225.6	8.88 / 225.6	8.88 / 225.6	8.88 / 225.6
WIDTH (in/mm)	3.32 / 84.3	3.32 / 84.3	3.32 / 84.3	3.32 / 84.3	3.32 / 84.3
WEIGHT w/o Arm & Battery (lbs/kg)	15.6 / 7.1	15.6 / 7.1	17.2 / 7.8	23.7 / 10.8	37.5 / 17.0
WEIGHT w/ Arm & Battery (lbs/kg)	18.6 / 8.4	18.6 / 8.4	20.0 / 9.1	26.6 / 12.1	47.7 / 21.5

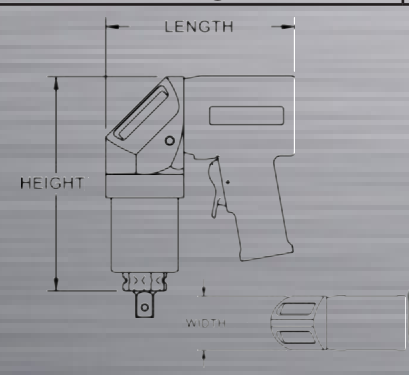

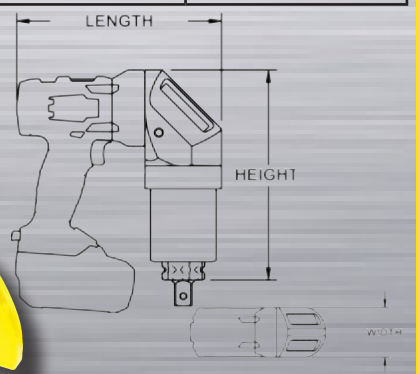

ALL RIGHT ANGLE GEAR BOXES MUST BE FACTORY INSTALLED

PART NUMBER: RPA-RAGB

TorcUP™

TorcUP Inc. 1025 Conroy Place Easton, PA. 18040 USA 1-888-TorcUP-1 +1 610-250-5800
www.TorcUP.com Sales@TorcUP.com

TorcUP products are subject to continual development and TorcUP reserves the right to make changes to the specifications and design of their products without prior notice. All rights are reserved. Reproduction in whole or in part without permission of TorcUP Inc. is prohibited.