SQ SQUARE DRIVE TORQUE WRENCH

Torque/Pressure Chart

Pump Pressure (P.S.I.)	Tool Output (FT./LBS.)
1000	330
1200	395
1400	460
1600	525
1800	590
2000	655
2200	722
2400	789
2600	856
2800	923
3000	990
3200	1,058
3400	1,126
3600	1,194
3800	1,262
4000	1,330
4200	1,397
4400	1,464
4600	1,531
4800	1,598
5000	1,665
5200	1,731
5400	1,797

torcUP™

THE SHAPE CHANGER

SQ

UNI-SWIVEL SQUARE DRIVE HYDRAULIC TORQUE WRENCH

THE WRENCH WITH CURVES

THE HYDRAULIC WRENCH WITH A SHAPE LIKE NO OTHER ... FOR A REASON! EVERY ANGLE, EVERY CURVE, EVERY FEATURE ON THE SQ SERIES IS DESIGNED WITH A PURPOSE. FROM A BLANK SHEET OF PAPER, WE TOOK 20 YEARS OF HYDRAULIC WRENCH KNOWLEDGE AND CREATED A WRENCH WITH A SHAPE WHICH IS UNIQUELY TORCUP. WITHIN THE BEAUTY OF THE SQ IS THE STRONGEST AND LONGEST TROUBLE-FREE OPERATING MECHANISM DESIGNED. THE PURPOSELY ENGINEERED THREE MOVING PARTS WITHIN THE SQ ARE THE RESULT OF 20 YEARS OF ON-SITE APPLICATION KNOWLEDGE. THE COMBINATION OF THE HIGHEST GRADE AEROSPACE ALLOYS AND FUTURISTIC MACHINING TECHNIQUES CREATE AN OUTPUT EFFICIENCY GREATER THAN ANY OTHER WRENCH ON THE MARKET. SIMPLY PUT...THERE IS NO COMPARISON TO THE SQ SERIES HYDRAULIC TORQUE WRENCH.

THE POWER INSIDE

1. PATENTED MONO-BODY HOUSING
2. BALANCED DRIVE ROD
3. MULTI-TOOTH DRIVE SEGMENT
4. ANTI-BACK LASH MECHANISM
5. LASER ENGRAVED TORQUE CHART
6. MULTI-TOOTH RATCHET
7. ONE PIECE DRIVE PLATE
8 PUSH-THROUGH DRIVE
9. SINGLE SEAL PISTON
10. DIRECT HOUSING REACTION
11 . STEEL REACTION BOOT
12. LONG LENGTH REACTION ARM
13. REACTION ARM THUMB RELEASE BUTTON
14. QUICK CONNECT NO-DRIP COUPLERS
15. 180° X 360° SINGLE SWIVEL MOVEMENT

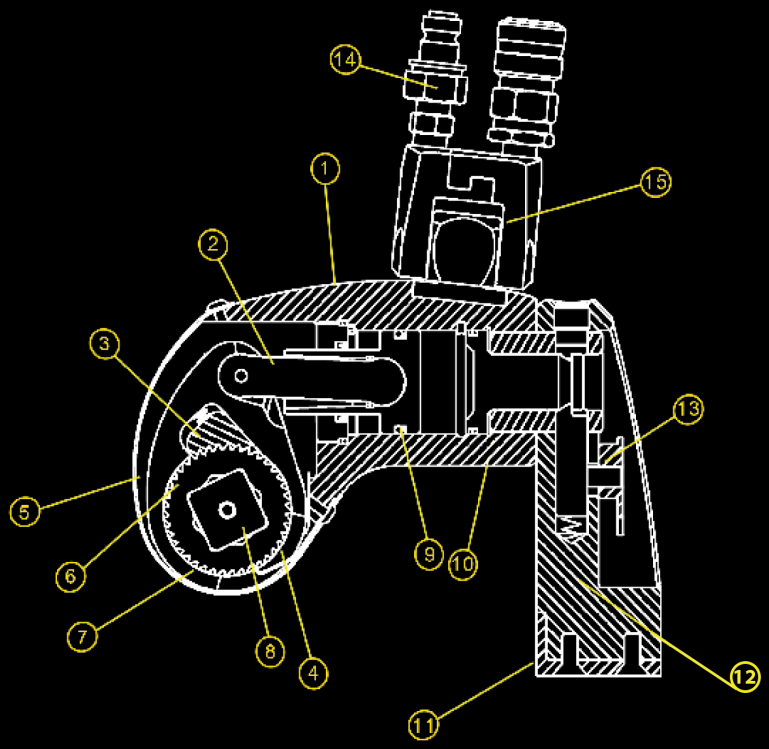

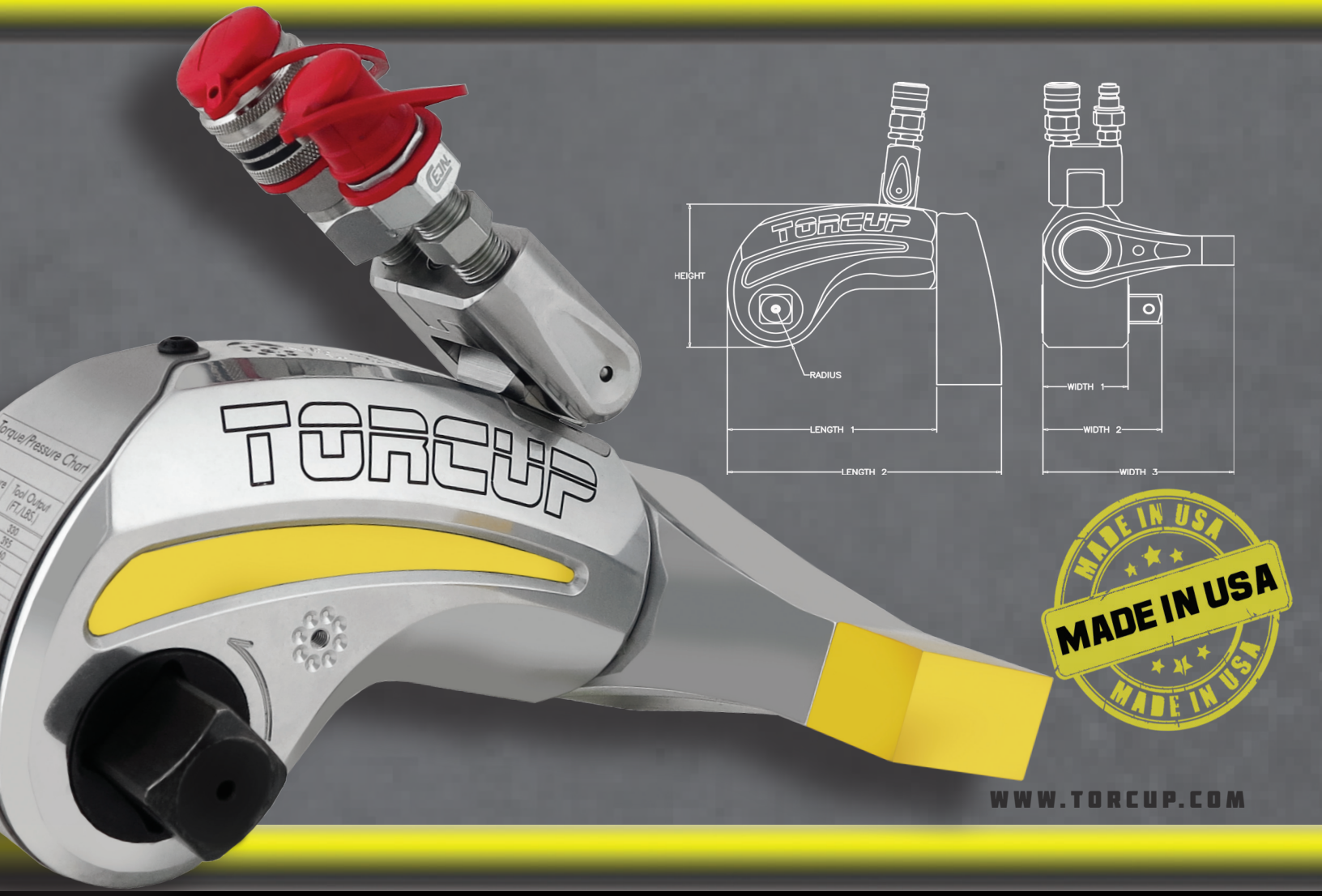

POWER ENGINEERED

MODEL NUMBER	SQ-1	SQ-3	SQ-5	SQ-10
SQUARE DRIVE	3/4″	1″	1 1/2″	1 1/2″
MIN. TORQUE (lbf-ft)	165	350	540	990
MAX. TORQUE (lbf-ft)	1460	3490	5700	11000
MIN. TORQUE (nm)	173	412	671	1291
MAX. TORQUE (nm)	2023	4805	7825	15062
OUTPUT ACCURACY	+/-3%	+/-3%	+/-3%	+/-3%
REPEATABILITY	100%	100%	100%	100%
DUTY CYCLE	100%	100%	100%	100%
TOOL WEIGHT (lbs)	5.5	11.0	18.5	32.0
TOOL WEIGHT (kgs)	2.5	5.0	8.4	14.5
HEIGHT (in)	3.76	4.91	6.05	7.34
HEIGHT (mm)	95.5	124.7	153.6	186.4
LENGTH 1 (in)	4.91	6.48	7.95	9.85
LENGTH 1 (mm)	124.7	164.5	201.9	250.1
LENGTH 2 (in)	6.47	8.48	10.70	12.85
LENGTH 2 (mm)	164.3	215.3	271.7	326.3
RADIUS (in)	0.99	1.31	1.57	2.13
RADIUS (mm)	25.1	33.2	39.8	54.1
WIDTH 1 (in)	2.0	2.63	3.13	3.95
WIDTH 1 (mm)	50.8	66.8	79.5	100.3
WIDTH 2 (in)	2.75	3.68	4.64	5.47
WIDTH 2 (mm)	69.8	93.5	117.8	138.9
WIDTH 3 (in)	4.61	5.92	7.0	8.74
WIDTH 3 (mm)	117.0	150.3	177.8	222.0

*Reference values only. Consult calibration torque chart provided with tool.

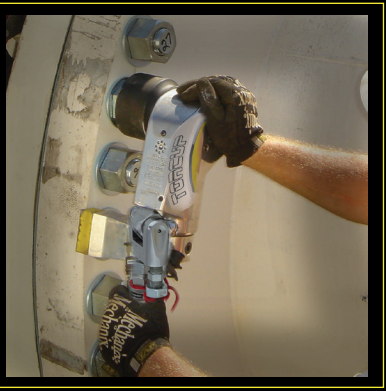

SQ SERIES UNI-SWIVEL SQUARE DRIVE HYDRAULIC TORQUE WRENCH

UNIQUE - THE SHAPE THAT FITS
ENDURING - 20 YEARS OF ENGINEERING
ADAPTABLE - ACCESSORIES FOR EVERYWHERE

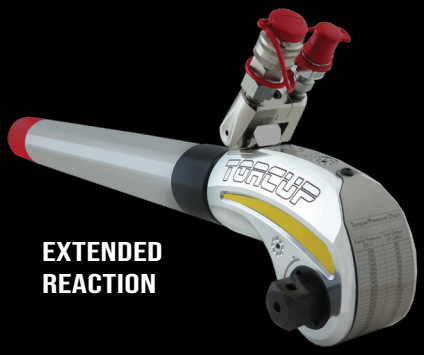
EXTENDED REACTION

DIRECT HEX ADAPTOR

END CAP PROTECTOR

TOOL HANDLE

NON PUSH THRU SQUARE DRIVE

WIDE BOOT REACTION ARM

SQ SERIES

Made In USA

Four Models From 165 lbf-ft to 11,000 lbf-ft

Every Unit Calibrated In Our ISO17025 Laboratory

Manufactured With AQ Certified Alloys

Only Three Moving Parts

Genuine TorcUP Design

CARRYING CASE
*Sold seperately.

WORLDWIDE HEADQUARTERS
1025 CONROY PLACE
EASTON, PA 18040 USA
TOLL FREE: 1-888-TORCUP-1
TELEPHONE: 1-610-250-5800
FAX: 1-610-250-2700

WWW.TORCUP.COM

SCAN FOR MORE INFO:

TorcUP products are subject to continual development and TorcUP reserves the right to make changes to the specifications and design of their products without prior notice. All rights are reserved. Reproduction in whole or in part without permission of TorcUP Inc. is prohibited.