TU SQUARE DRIVE TORQUE WRENCH

torcUP

UNCOMPLICATED HYDRAULIC BOLTING

TU

SQUARE DRIVE HYDRAULIC TORQUE WRENCH

THE WRENCH WITH STYLE

NOT ONLY DOES THE TU SERIES LOOK GOOD ... BUT IT PERFORMS GREAT!! THE "GO-TO" TOOL ON EVERY JOB-SITE IS THE TU SQUARE DRIVE HYDRAULIC WRENCH. FROM 130 FT/LBS TO 60,000 FT/LBS THE TU IS THE ONE TOOL THAT ALL CUSTOMERS KNOW WILL BE THERE WHEN THEY NEED IT. WITH ONLY THREE MOVING PARTS CONSTRUCTED FROM THE HIGHEST GRADE AEROSPACE ALLOYS, THE TU PROVIDES YEARS OF TROUBLE FREE OPERATION. WHEN IT COMES TO LUBRICATION AND PREVENTATIVE MAINTENANCE, THERE IS NO SQUARE DRIVE HYDRAULIC WRENCH COMPARABLE TO THE TU SERIES. RELIABILITY, EASE OF USE, EASE OF FITMENT ON APPLICATIONS, SIMPLE TO MAINTAIN ... THIS IS JUST THE START OF A LONG LIST OF FEATURES THAT BENEFIT THE USERS OF THE TU SERIES. AND LAST BUT NOT LEAST ... MADE IN USA!!

THE POWER INSIDE

1. PATENTED MONO-BODY HOUSING
2. BALANCED DRIVE ROD
3. MULTI-TOOTH DRIVE SEGMENT
4. ANTI-BACK LASH MECHANISM
5. LASER ENGRAVED TORQUE CHART
6. MULTI-TOOTH RATCHET
7. ONE PIECE DRIVE PLATE
8. PUSH-THROUGH DRIVE
9. SINGLE SEAL PISTON
10. DIRECT HOUSING REACTION
11. STEEL REACTION BOOT
12. LONG LENGTH REACTION ARM
13. REACTION ARM THUMB RELEASE BUTTON
14. 360° X 360° DUAL INDEPENDENT MOVEMENT
15. QUICK CONNECT NO-DRIP COUPLERS

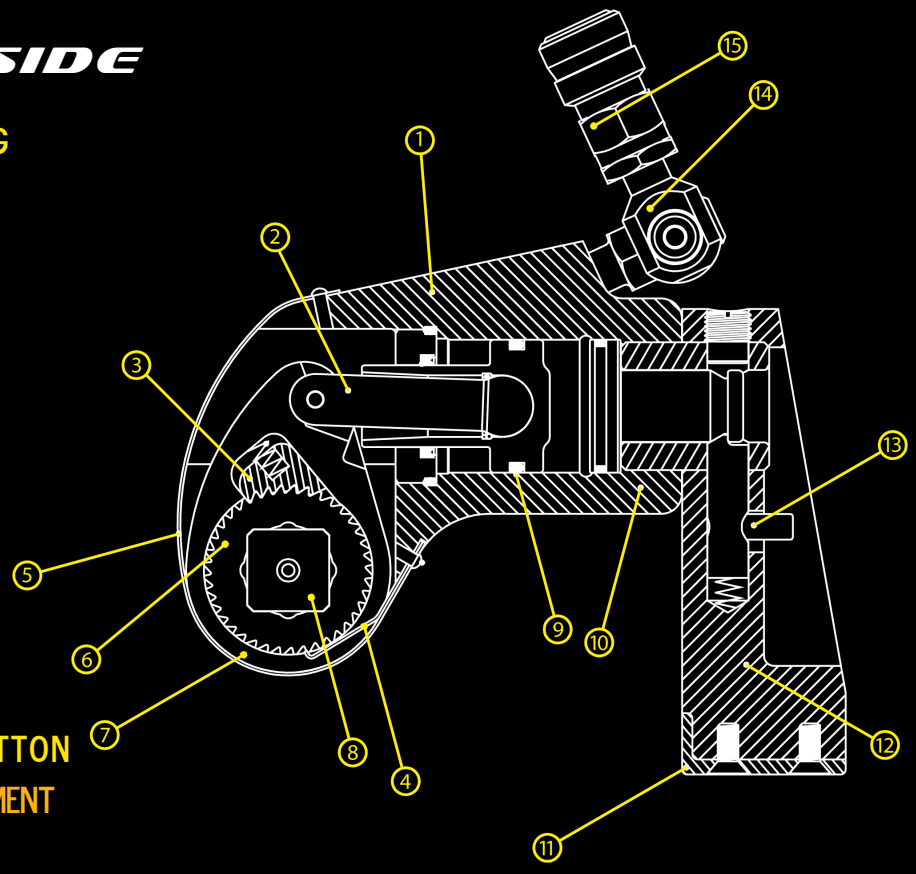

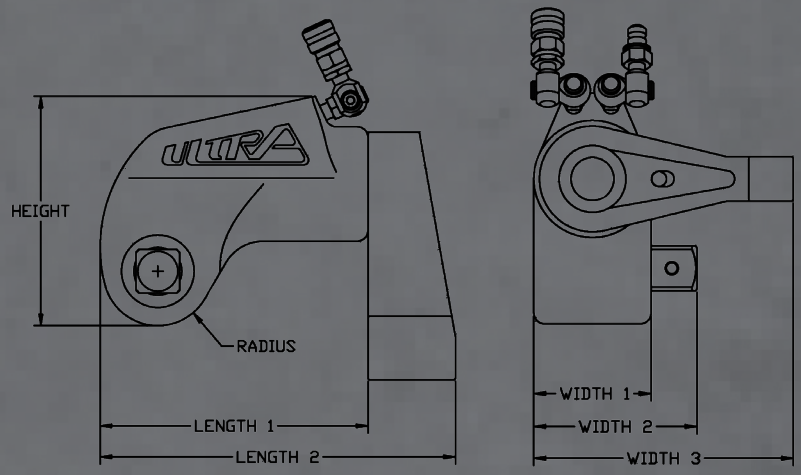

MADE IN USA

WWW.TORCUP.COM

POWER ENGINEERED

MODEL NUMBER	TU-2	TU-3	TU-5	TU-7	TU-11	TU-20	TU-27	TU-60
SQUARE DRIVE	3/4″	1″	1 1/2″	1 1/2″	1 1/2″	2 1/2″	2 1/2″	2 1/2″
MIN. TORQUE (lbf-ft)*	165	350	540	690	1060	2000	2660	5800
MAX. TORQUE (lbf-ft)*	1460	3490	5700	7980	12100	21400	28510	61510
MIN. TORQUE (nm)*	173	412	671	935	1418	2516	3352	7235
MAX. TORQUE (nm)*	2023	4805	7285	10906	16547	29356	39106	84413
OUTPUT ACCURACY	+/-3%	+/-3%	+/-3%	+/-3%	+/-3%	+/-3%	+/-3%	+/-3%
REPEATABILITY	100%	100%	100%	100%	100%	100%	100%	100%
DUTY CYCLE	100%	100%	100%	100%	100%	100%	100%	100%
TOOL WEIGHT (lbs)	5.6	10.9	18.1	19.0	29.0	61.0	70.0	130.0
TOOL WEIGHT (kgs)	2.5	4.9	8.2	8.6	13.1	27.6	31.7	59.8
HEIGHT (in)	4.20	5.33	6.40	7.17	7.80	9.22	10.19	11.50
HEIGHT (mm)	106.7	135.3	162.6	182.1	198.1	234.3	258.8	292.1
LENGTH 1 (in)	4.82	6.40	7.91	8.84	9.79	9.44	12.32	15.38
LENGTH 1 (mm)	122.4	162.5	200.9	224.5	248.6	239.7	312.9	390.7
LENGTH 2 (in)	6.34	8.43	10.66	11.58	12.79	16.09	16.33	20.40
LENGTH 2 (mm)	161.0	214.1	270.7	294.1	324.8	408.9	414.8	518.2
RADIUS (in)	0.98	1.31	1.57	1.77	2.03	2.31	2.46	3.10
RADIUS (mm)	24.9	33.2	39.8	44.9	51.5	58.7	62.5	78.7
WIDTH 1 (in)	2.00	2.63	3.12	3.61	3.95	4.87	5.26	6.58
WIDTH 1 (mm)	50.8	66.8	79.2	91.7	100.3	123.6	133.6	167.1
WIDTH 2 (in)	2.79	3.68	4.64	5.06	5.43	7.15	7.57	8.89
WIDTH 2 (mm)	70.9	93.5	117.8	128.5	137. 9	181.7	192.3	225.8
WIDTH 3 (in)	4.42	5.81	7.00	7.98	8.72	10.88	11.63	14.29
WIDTH 3 (mm)	112.3	147.6	177.8	202.7	221.5	276.4	295.4	363.0

*Reference values only. Consult calibration torque chart provided with tool.

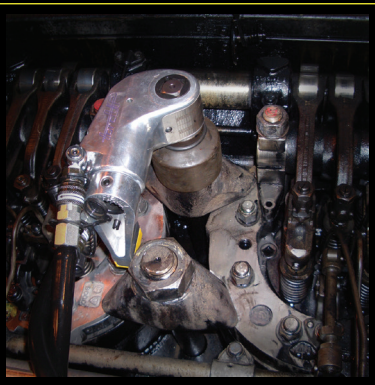
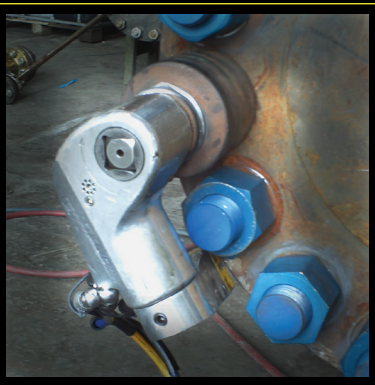
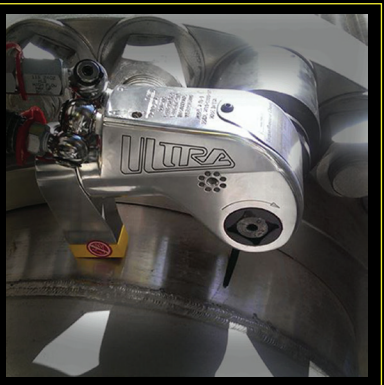

TU SERIES SQUARE DRIVE HYDRAULIC TORQUE WRENCH

DESIGN - UNIQUE AND EXCLUSIVE
DURABLE - HIGHEST GRADE ALLOYS
DEPENDABLE - ROBUST 3 MOVING PARTS

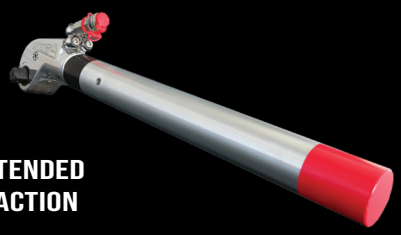

EXTENDED REACTION

DIRECT HEX ADAPTOR

END CAP PROTECTOR

HOUSING REACTION PAD

NON PUSH THRU SQUARE DRIVE

WIDE BOOT REACTION ARM

WORLDWIDE HEADQUARTERS
1025 CONROY PLACE
EASTON, PA 18040 USA
TOLL FREE: 1-888-TORCUP-1
TELEPHONE: 1-610-250-5800
FAX: 1-610-250-2700

WWW.TORCUP.COM

TU SERIES

Made In USA

Eight Models From 165 lbf-ft to 61,510 lbf-ft

Every Unit Calibrated In ISO17025 Laboratory

Manufactured With AQ Certified Alloys

Genuine TorcUP Design

Patented Mono-Body Housing

CARRYING CASE
*Sold seperately.

TorcUP products are subject to continual development and TorcUP reserves the right to make changes to the specifications and design of their products without prior notice. All rights are reserved. Reproduction in whole or in part without permission of TorcUP Inc. is prohibited.