TXU Series

OPERATION AND MAINTENANCE

MANUAL

TXU Series Uni-Swivel Low Profile Hydraulic Torque Wrenches

MODELS TXU-2, TXU-4, TXU-8, TXU-16, and TXU-32

1025 Conroy Place, Easton, PA. 18040 U.S.A.

Phone: +1 610-250-5800
Fax: +1 610-250-2700
Toll Free: 1-888-TORCUP-1
Email: sales@torcup.com
Website: www.torcup.com

Operational and Maintenance Manual for TorcUP
TXU-2, TXU-4, TXU-8, TXU-16 & TXU-32
Uni-Swivel Low Profile Hydraulic Torque Wrenches
Version 7: 2025 October

NOTICE

Series TXU-2, TXU-4, TXU-8, TXU-16 and TXU-32 Low Profile Hydraulic Torque Wrenches are designed for installing and removing threaded fasteners having minimal wrench clearance and requiring precise high torque during bolt makeup and maximum torque for bolt breakout.

TorcUP Inc. is not responsible for customer modification of tools for applications on which TorcUP Inc. was not consulted.

WARNING

IMPORTANT SAFETY INFORMATION ENCLOSED.
READ THIS MANUAL BEFORE OPERATING TOOL.
IT IS THE RESPONSIBILITY OF THE EMPLOYER TO PLACE THE INFORMATION IN THIS MANUAL INTO THE HANDS OF THE OPERATOR.
FAILURE TO OBSERVE THE FOLLOWING WARNINGS COULD RESULT IN INJURY.

USING THE TOOL

- Always operate, inspect and maintain this tool in accordance with American National Standards Safety Code for Hydraulic Rams and Jacks (ANSI B30.1).
- This tool will function using an air or electric powered hydraulic pump. Adhere to the pump safety requirements and follow instructions when connecting the pump to the tool.
- Use only equipment rated for the same pressure and torque.
- Use only a hydraulic pump capable of generating 10,000 psi (690 bar) maximum pressure with this tool.
- Use only twin line hydraulic hose rated for 10,000 psi (690 bar) pressure with this tool.
- Do not interchange the male and female swivel inlets on the tool or the connections on one end of the hose. Reversing the inlets will reverse the power stroke cycle and may damage the tool.
- Do not use damaged, frayed or deteriorated hoses and fittings. Make certain there are no cracks, splits or leaks in the hoses.
- Use the quick connect system to attach the hoses to the tool and pump.
- When connecting hoses that have not been preloaded with hydraulic oil, make certain the pump reservoir is not drained of oil during start-up.
- Do not remove any labels. Replace any damaged label.
- Do not handle pressurized hoses. Escaping oil under pressure can penetrate the skin, causing serious injury. If oil is injected under the skin, see a doctor immediately.
- Never pressurize uncoupled couplers. Only use hydraulic equipment in a coupled system.
- Always wear eye protection when operating or performing maintenance on this tool.
- Always wear head and hand protection and protective clothing when operating this tool.

The use of other than genuine TorcUP replacement parts may result in safety hazards, decreased tool performance, increased maintenance, and may invalidate all warranties. Repairs should be made only by authorized personnel. Consult your nearest TorcUP Authorized Service Center.

Refer All Communications to the Nearest TorcUP Office or Distributor.

For Technical Support & Information Contact:
TorcUP Inc.
1025 Conroy Place, Easton, PA 18040 USA
Phone: +1 610-250-5800 Fax:+1 610-250-2700
email: sales@torcup.com

WARNING

FAILURE TO OBSERVE THE FOLLOWING WARNINGS COULD RESULT IN INJURY

Do NOT Exceed Maximum Pressure. See Torque Chart with Tool. Damage May Occur.

Do not use damaged, frayed or deteriorated hydraulic hoses and fittings.

Always wear eye protection when operating or performing maintenance on this tool.

Always wear ear protection when operating this tool.

Do not carry the tool by the hose.

Keep body stance balanced and firm. Do not overreach when operating this tool.

The Torque Reaction Arm must be positioned against a positive stop. Do not use the arm as a dead handle. Take all precautions to make certain the operator's hand cannot be pinched between the arm and a solid object.

USING THE TOOL

- Keep hands, loose clothing and long hair away from the reaction arm and working area during operation.
- This tool will exert a strong reaction force. Use proper mechanical support and correct reaction arm positioning to control these forces. Do not position the reaction arm so that it tilts the tool off the axis of the bolt and never use the swivel inlets as a reaction stop.
- Avoid sharp bends and kinks that will cause severe back-up pressure in hoses and lead to premature hose failure.
- Use accessories recommended by TorcUP.
- Use only impact sockets and accessories. Do not use hand (chrome) sockets or accessories.
- Use only sockets and accessories that correctly fit the bolt or nut and function without tilting the tool off the axis of the bolt.
- This tool is not insulated against electric shock.
- This equipment must not be operated or serviced unless the operator read the operating instructions and fully understands the purpose, consequences and procedure of each step.
- When operating a larger tool (TXU-16) above waist height, employ a secondary means of support for safety purposes. A tool sling or chains may be used. Consult your safety department for further suggestions.

Depending on the working environment your local health and safety regulations may require you wear protective gear (i.e. safety shoes, hard hat, gloves, coveralls, etc.). In case external forces are exerted on the equipment, non-compliance with these regulations may result in injury. EAR PROTECTION MUST BE WORN WHEN OPERATING THIS TOOL.

PLACING THE TOOL IN SERVICE

CONNECTING THE TOOL

Dwg. 1

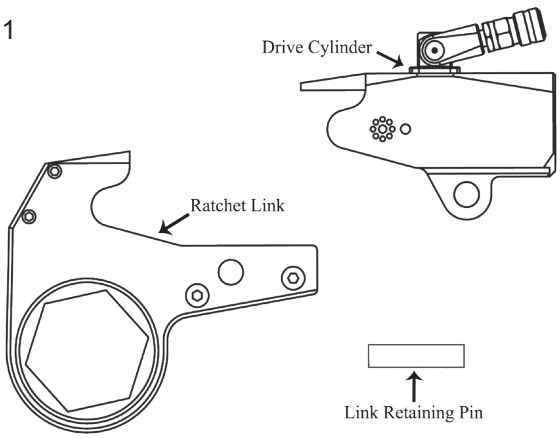

1. Attach the twin line hose to the swivel inlets of the low profile drive cylinder using the spring–loaded quick connect ends.
2. Connect the opposite ends of the hose to the pump in the same manner.
3. Push the link retaining pin out of the low profile drive cylinder.
4. Mate the selected ratchet link to the cylinder by inserting the end of the cylinder opposite the swivel inlets between the side plates of the ratchet link. (Refer to Dwg. 1)
5. Align the holes for the link retaining pin and insert the pin through the side plates and cylinder to keep the units joined together.

SETTING THE TORQUE

After determining the desired torque, use the torque conversion charts on pages 7 to 16 to determine the pressure that is necessary to achieve that torque.

1. Connect the tool to the power supply and turn the pump on.
2. Depress the remote control button causing the pressure to be shown on the gauge.
3. Adjust the pressure by loosening the wing nut that locks the pressure adjustment thumbscrew. Rotate the thumbscrew clockwise to increase the pressure and counterclockwise to decrease the pressure. When decreasing pressure, always lower the pressure below the desired point and then bring the gauge back up to the desired pressure.
4. When the desired pressure is reached, retighten the wing nut and cycle the tool again to confirm that the desired pressure setting has been obtained.

OPERATING THE WRENCH

The position of the tool relative to the nut determines whether the action will tighten or loosen the nut. (Refer to Dwg. 2 for application examples). The power stroke of the piston assembly will always turn the ratchet hex toward the shroud.

1. Place the ratchet hex on the nut. Make certain it is the correct size for the nut and that it fully engages the nut.
2. Position the reaction surface against an adjacent nut, flange or solid system component. Make certain that there is clearance for the hoses, swivels and inlets. **DO NOT** allow the tool to react against the hoses or swivels.

Wrench Positions Dwg. 2

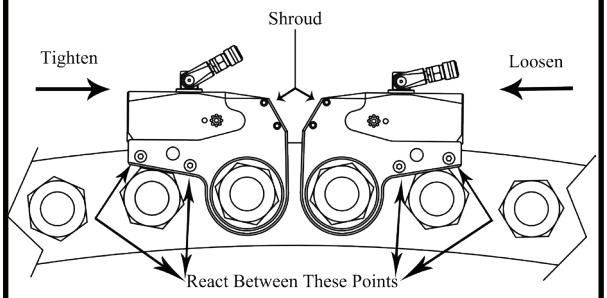

PLACING THE TOOL IN SERVICE

3. After having turned the pump on and presetting the pressure for the correct torque, depress the remote control button to advance the piston assembly. If the notch in the piston rod did not engage the retract pin in the ratchet link when the link was joined to the housing, it will engage the pin automatically during the first advance stroke.
4. When the link is connected to the cylinder and the wrench is started, the reaction surface of the wrench will move against the contact point and the nut will begin to turn.
5. When the nut is no longer turning and the pump gauge reaches the preset pressure, release the remote control button. The piston rod will retract when the button is released and under normal conditions, an audible “click” will be heard as the tool resets itself.
6. Continue to cycle the tool until it “stalls” and the preset psi/torque has been attained.
7. Cycle the tool one additional time to ensure full torque.

LUBRICATION

MARINE MOLY GREASE

Lubrication frequency is dependent on factors known only to the user. The amount of contaminants in the work area is one factor. Tools used in a clean room environment will obviously require less service than a tool used out-doors and dropped in loose dirt or sand. Marine Moly Grease is formulated not to wash out of the tool in areas where lubrication is critical. Whenever lubrication is required, lubricate as follows:

1. Separate the low profile cylinder from the ratchet link if they are joined.
2. After wiping off the old grease, apply a daub of Marine Moly Grease to the hooking notch in the piston rod, and wipe a film of Marine Moly Grease onto the sides and faces of the two sliders.
3. Disassemble the ratchet link as instructed in the Maintenance Section and wash the components in a suitable cleaning solution in a well ventilated area.
4. Dry the components, then wipe a film of Marine Moly Grease onto the wear surface of both side plate sleeves and the hubs of the ratchet.
5. Spread a light film of Marine Moly Grease onto the inner faces of both side plates, covering the area where the drive plate and drive segment travel. DO NOT pack the teeth of the drive segment or ratchet with lube. It can prevent the teeth from engaging properly.
6. Reassemble the ratchet link as instructed in the Maintenance Section.

TXU Series Uni-Swivel Wrench Technical & Dimensional Data

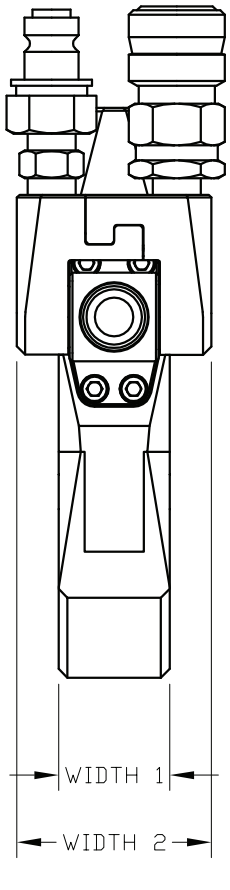

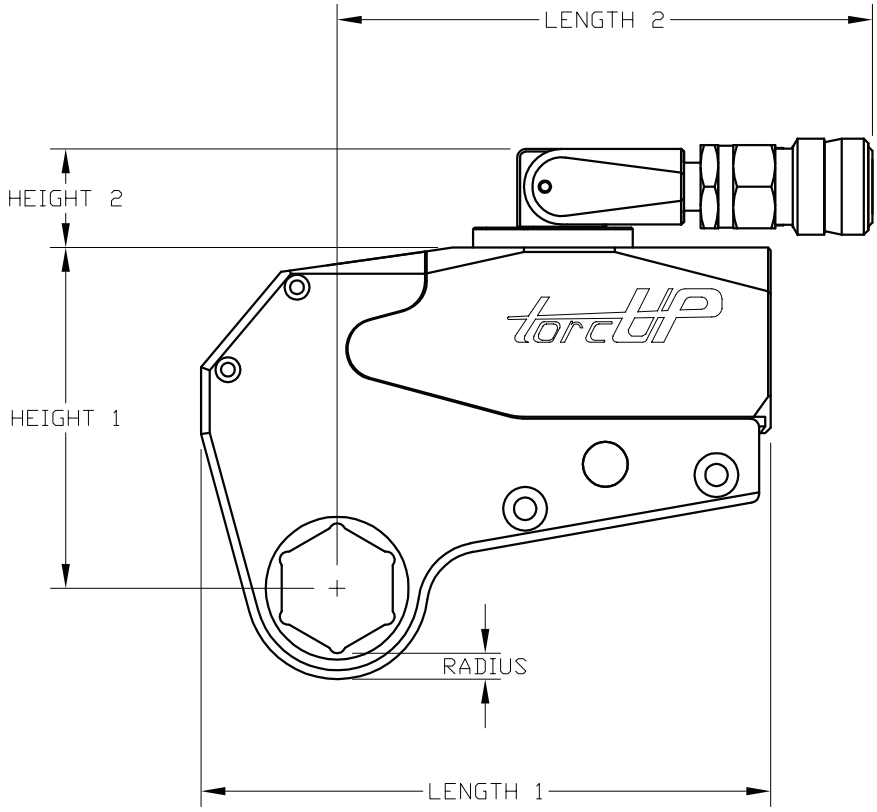

Model Number		TXU-2	TXU-4	TXU-8	TXU-16
Min. Torque (ft/lbs)		240	472	800	1525
Max. Torque (ft/lbs)		2320	4786	8800	16300
Min. Torque (nm)		274	564	1033	1917
Max. Torque (nm)		3199	6584	12055	22361
Output Accuracy		+/-3%	+/-3%	+/-3%	+/-3%
Repeatability		100%	100%	100%	100%
Duty Cycle		100%	100%	100%	100%
Cylinder Weight (lbs/kg)		4.0/1.8	6.9/3.1	12.5/5.7	17.1/7.8
Link Weight	(lbs)	2.4-3.5	5.4-7.6	11.9-14.5	21.0-28.0
	(kg)	1.0-1.5	2.4-3.4	5.5-6.5	9.5-13.0
Length 1 (in/mm)		6.45/163.8	7.87/199.9	10.81/258.6	12.93/328.4
Length 2 (in/mm)		5.99/152.4	6.58/167.1	7.34/186.4	8.20/208.2
Width 1 (in/mm)		1.25/31.8	1.63/41.4	2.05/52.1	2.50/63.5
Width 2 (in/mm)		2.19/55.6	2.26/57.4	2.26/57.4	2.26/57.4
Radius (in/mm)		0.36/9.1	0.46/11.7	0.54/13.7	0.65/16.5
Height 1 (in/mm)		3.39/86.3	4.93/125.2	6.18/157	7.83/198.9
Height 2 (in/mm)		1.11/28.2	1.30/33.0	1.30/33.0	1.30/33.0
Hex Range from		3/4”/19mm	1”/27mm	1 7/8”/49mm	2 3/16”/55mm
Hex Range to		2 9/16”/65mm	3 1/8”/80mm	4 5/8”/120mm	5 5/16”/135mm

*Reference values only. Consult calibration torque chart provided with tool.

TXU Series Uni-Swivel Wrench Technical & Dimensional Data

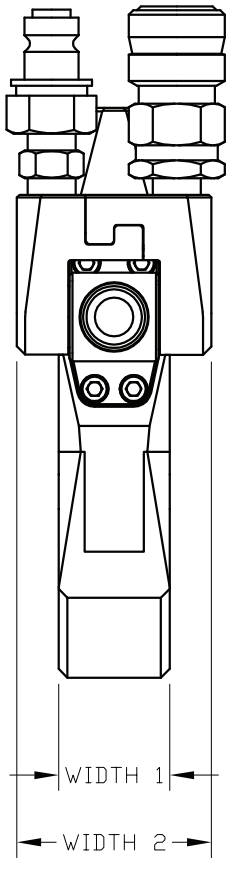

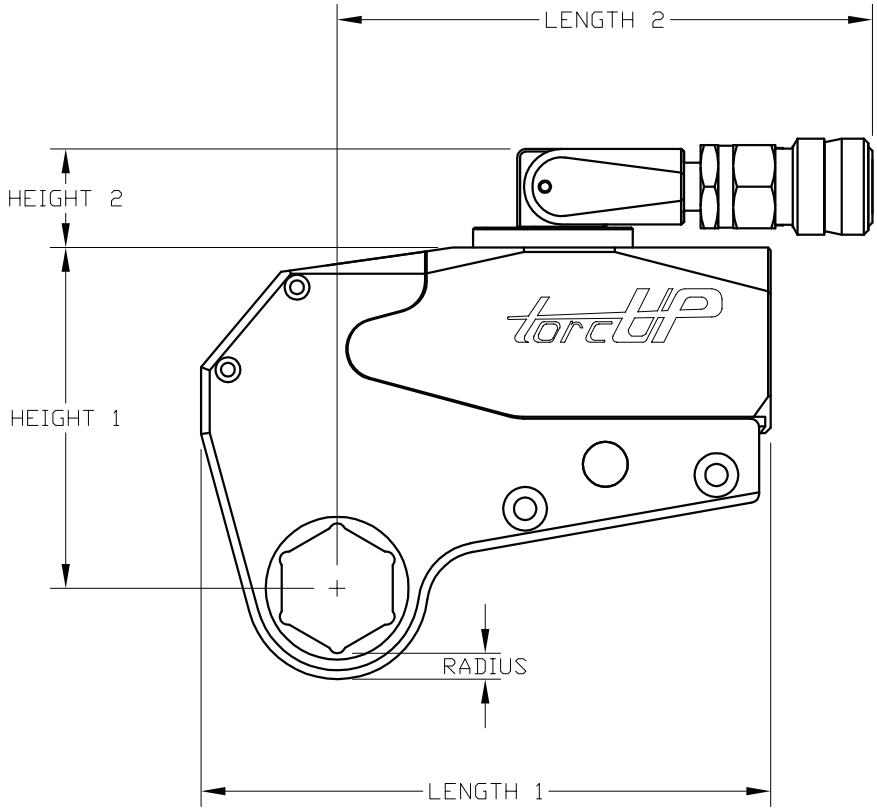

Model Number	TXU-32
Min. Torque (ft/lbs)	3500
Max. Torque (ft/lbs)	38100
Min. Torque (nm)	4476
Max. Torque (nm)	52220
Output Accuracy	+/-3%
Repeatability	100%
Duty Cycle	100%
Cylinder Weight (lbs/kg)	27.1/12.3
Link Weight (lbs)	29.0-35.5
Link Weight (kg)	13.0-17.9
Length 1 (in/mm)	15.80/401.3
Length 2 (in/mm)	9.31/236.5
Width 1 (in/mm)	3.24/82.3
Width 2 (in/mm)	2.26/57.4
Radius (in/mm)	0.93/23.6
Height 1 (in/mm)	9.50/241.3
Height 2 (in/mm)	1.30/33.0
Hex Range from	3 1/8”/80mm
Hex Range to	8”/205mm

*Reference values only. Consult calibration torque chart provided with tool.

TXU-2 Torque Conversion Chart (Imperial)

Hex Range 3/4" - 1 13/16"	Imperial Conversion	
	PSI	Ft-lbs
	1,000	202
	1,200	240
	1,400	278
	1,600	317
	1,800	355
	2,000	393
	2,200	432
	2,400	471
	2,600	511
	2,800	550
	3,000	589
	3,200	629
	3,400	669
	3,600	708
	3,800	748
	4,000	788
	4,200	827
	4,400	867
	4,600	906
	4,800	946
	5,000	985
	5,200	1024
	5,400	1064
	5,600	1103
	5,800	1142
	6,000	1182
	6,200	1222
	6,400	1261
	6,600	1301
	6,800	1341
	7,000	1381
	7,200	1421
	7,400	1461
	7,600	1500
	7,800	1540
	8,000	1579
	8,200	1619
	8,400	1658
	8,600	1697
	8,800	1737
	9,000	1776
	9,200	1814
	9,400	1853
	9,600	1892
	9,800	1930
	10,000	1969

Hex Range 1 7/8" - 2 9/16"	Imperial Conversion	
	PSI	Ft-lbs
	1,000	237
	1,200	282
	1,400	326
	1,600	371
	1,800	415
	2,000	460
	2,200	506
	2,400	552
	2,600	598
	2,800	644
	3,000	690
	3,200	737
	3,400	783
	3,600	830
	3,800	876
	4,000	923
	4,200	969
	4,400	1015
	4,600	1062
	4,800	1108
	5,000	1154
	5,200	1200
	5,400	1246
	5,600	1292
	5,800	1338
	6,000	1384
	6,200	1431
	6,400	1478
	6,600	1524
	6,800	1571
	7,000	1618
	7,200	1664
	7,400	1711
	7,600	1757
	7,800	1804
	8,000	1850
	8,200	1896
	8,400	1942
	8,600	1988
	8,800	2034
	9,000	2080
	9,200	2125
	9,400	2170
	9,600	2216
	9,800	2261
	10,000	2306

*Reference values only. Consult calibration torque chart provided with tool.

TXU-2 Torque Conversion Chart (Metric)

Hex Range 19-46mm	Metric Conversion	
	Bar	Nm
	69	274
	83	326
	97	378
	110	429
	124	481
	138	532
	152	586
	165	639
	179	692
	193	745
	207	799
	221	853
	234	907
	248	961
	262	1014
	276	1068
	290	1122
	303	1175
	317	1229
	331	1282
	345	1336
	359	1389
	372	1442
	386	1496
	400	1549
	414	1602
	427	1656
	441	1710
	455	1765
	469	1819
	483	1873
	496	1927
	510	1980
	524	2034
	538	2088
	552	2141
	565	2195
	579	2248
	593	2301
	607	2354
	621	2408
	634	2460
	648	2512
	662	2565
	676	2617
	689	2669

Hex Range 47-65mm	Metric Conversion	
	Bar	Nm
	69	321
	83	382
	97	442
	110	503
	124	563
	138	624
	152	686
	165	748
	179	811
	193	873
	207	936
	221	999
	234	1062
	248	1125
	262	1188
	276	1251
	290	1314
	303	1377
	317	1439
	331	1502
	345	1565
	359	1627
	372	1689
	386	1752
	400	1814
	414	1876
	427	1940
	441	2003
	455	2067
	469	2130
	483	2194
	496	2257
	510	2320
	524	2382
	538	2445
	552	2508
	565	2571
	579	2633
	593	2695
	607	2758
	621	2820
	634	2881
	648	2943
	662	3004
	676	3065
	689	3127

*Reference values only. Consult calibration torque chart provided with tool.

TXU-4 Torque Conversion Chart (Imperial)

Hex Range 1" - 2 9/16"	Imperial Conversion	
	PSI	Ft-lbs
	1,000	422
	1,200	502
	1,400	582
	1,600	663
	1,800	743
	2,000	823
	2,200	906
	2,400	989
	2,600	1072
	2,800	1155
	3,000	1238
	3,200	1320
	3,400	1401
	3,600	1483
	3,800	1564
	4,000	1646
	4,200	1726
	4,400	1806
	4,600	1887
	4,800	1967
	5,000	2047
	5,200	2128
	5,400	2209
	5,600	2289
	5,800	2370
	6,000	2451
	6,200	2533
	6,400	2615
	6,600	2698
	6,800	2780
	7,000	2862
	7,200	2942
	7,400	3021
	7,600	3101
	7,800	3180
	8,000	3260
	8,200	3343
	8,400	3426
	8,600	3510
	8,800	3593
	9,000	3676
	9,200	3758
	9,400	3840
	9,600	3922
	9,800	4004
	10,000	4086

Hex Range 2 5/8" - 3 1/8"	Imperial Conversion	
	PSI	Ft-lbs
	1,000	475
	1,200	565
	1,400	655
	1,600	745
	1,800	836
	2,000	926
	2,200	1019
	2,400	1112
	2,600	1206
	2,800	1299
	3,000	1393
	3,200	1484
	3,400	1576
	3,600	1668
	3,800	1760
	4,000	1852
	4,200	1942
	4,400	2032
	4,600	2122
	4,800	2212
	5,000	2303
	5,200	2393
	5,400	2484
	5,600	2575
	5,800	2666
	6,000	2757
	6,200	2849
	6,400	2942
	6,600	3034
	6,800	3127
	7,000	3219
	7,200	3309
	7,400	3398
	7,600	3488
	7,800	3577
	8,000	3667
	8,200	3761
	8,400	3854
	8,600	3948
	8,800	4041
	9,000	4135
	9,200	4227
	9,400	4319
	9,600	4412
	9,800	4504
	10,000	4596

*Reference values only. Consult calibration torque chart provided with tool.

TXU-4 Torque Conversion Chart (Metric)

	Metric Conversion	
	Bar	Nm
Hex Range 27-65mm	69	572
	83	681
	97	790
	110	898
	124	1007
	138	1116
	152	1228
	165	1341
	179	1453
	193	1566
	207	1679
	221	1789
	234	1900
	248	2010
	262	2121
	276	2232
	290	2340
	303	2449
	317	2558
	331	2667
	345	2775
	359	2885
	372	2994
	386	3104
	400	3214
	414	3323
	427	3435
	441	3546
	455	3657
	469	3769
	483	3880
	496	3988
	510	4096
	524	4204
	538	4312
	552	4420
	565	4533
	579	4646
	593	4758
	607	4871
	621	4984
	634	5095
	648	5206
	662	5318
	676	5429
	689	5540

	Metric Conversion	
	Bar	Nm
Hex Range 66-80mm	69	644
	83	766
	97	888
	110	1011
	124	1133
	138	1255
	152	1382
	165	1508
	179	1635
	193	1761
	207	1888
	221	2013
	234	2137
	248	2261
	262	2386
	276	2510
	290	2633
	303	2755
	317	2877
	331	3000
	345	3122
	359	3245
	372	3368
	386	3492
	400	3615
	414	3738
	427	3863
	441	3989
	455	4114
	469	4239
	483	4365
	496	4486
	510	4608
	524	4729
	538	4850
	552	4972
	565	5099
	579	5226
	593	5352
	607	5479
	621	5606
	634	5731
	648	5856
	662	5981
	676	6107
	689	6232

*Reference values only. Consult calibration torque chart provided with tool.

TXU-8 Torque Conversion Chart (Imperial)

Hex Range 1 7/8"- 3 1/8"	Imperial Conversion	
	PSI	Ft-lbs
	1,000	797
	1,200	957
	1,400	1117
	1,600	1277
	1,800	1437
	2,000	1597
	2,200	1758
	2,400	1918
	2,600	2079
	2,800	2239
	3,000	2400
	3,200	2559
	3,400	2719
	3,600	2878
	3,800	3037
	4,000	3197
	4,200	3354
	4,400	3511
	4,600	3668
	4,800	3825
	5,000	3982
	5,200	4143
	5,400	4303
	5,600	4463
	5,800	4623
	6,000	4784
	6,200	4946
	6,400	5109
	6,600	5272
	6,800	5434
	7,000	5597
	7,200	5756
	7,400	5916
	7,600	6076
	7,800	6236
	8,000	6395
	8,200	6564
	8,400	6732
	8,600	6900
	8,800	7068
	9,000	7236
	9,200	7393
	9,400	7551
	9,600	7709
	9,800	7866
	10,000	8024

Hex Range 3 3/16"- 3 9/16"	Imperial Conversion	
	PSI	Ft-lbs
	1,000	842
	1,200	1011
	1,400	1180
	1,600	1350
	1,800	1519
	2,000	1688
	2,200	1858
	2,400	2027
	2,600	2197
	2,800	2366
	3,000	2536
	3,200	2704
	3,400	2873
	3,600	3041
	3,800	3210
	4,000	3378
	4,200	3544
	4,400	3710
	4,600	3876
	4,800	4042
	5,000	4208
	5,200	4377
	5,400	4547
	5,600	4716
	5,800	4886
	6,000	5055
	6,200	5227
	6,400	5399
	6,600	5570
	6,800	5742
	7,000	5914
	7,200	6083
	7,400	6252
	7,600	6420
	7,800	6589
	8,000	6758
	8,200	6936
	8,400	7113
	8,600	7291
	8,800	7468
	9,000	7646
	9,200	7813
	9,400	7979
	9,600	8146
	9,800	8312
	10,000	8479

Hex Range 3 5/8"- 4 5/8"	Imperial Conversion	
	PSI	Ft-lbs
	1,000	978
	1,200	1174
	1,400	1370
	1,600	1567
	1,800	1763
	2,000	1960
	2,200	2157
	2,400	2353
	2,600	2550
	2,800	2747
	3,000	2944
	3,200	3140
	3,400	3335
	3,600	3531
	3,800	3726
	4,000	3922
	4,200	4114
	4,400	4307
	4,600	4500
	4,800	4693
	5,000	4885
	5,200	5082
	5,400	5279
	5,600	5475
	5,800	5672
	6,000	5869
	6,200	6068
	6,400	6267
	6,600	6467
	6,800	6666
	7,000	6866
	7,200	7062
	7,400	7258
	7,600	7454
	7,800	7650
	8,000	7846
	8,200	8052
	8,400	8258
	8,600	8464
	8,800	8670
	9,000	8877
	9,200	9070
	9,400	9263
	9,600	9457
	9,800	9650
	10,000	9844

*Reference values only. Consult calibration torque chart provided with tool.

TXU-8 Torque Conversion Chart (Metric)

Hex Range 49-80mm	Metric Conversion	
	Bar	Nm
	69	1080
	83	1297
	97	1515
	110	1732
	124	1949
	138	2166
	152	2383
	165	2601
	179	2819
	193	3036
	207	3254
	221	3470
	234	3686
	248	3902
	262	4118
	276	4334
	290	4547
	303	4760
	317	4973
	331	5186
	345	5399
	359	5617
	372	5834
	386	6051
	400	6269
	414	6486
	427	6706
	441	6927
	455	7147
	469	7368
	483	7588
	496	7805
	510	8021
	524	8238
	538	8454
	552	8671
	565	8899
	579	9127
	593	9355
	607	9583
	621	9810
	634	10024
	648	10238
	662	10452
	676	10665
	689	10879

Hex Range 81-90mm	Metric Conversion	
	Bar	Nm
	69	1142
	83	1371
	97	1600
	110	1830
	124	2059
	138	2289
	152	2519
	165	2749
	179	2978
	193	3208
	207	3438
	221	3667
	234	3895
	248	4123
	262	4352
	276	4580
	290	4805
	303	5030
	317	5255
	331	5480
	345	5705
	359	5935
	372	6165
	386	6394
	400	6624
	414	6854
	427	7087
	441	7320
	455	7552
	469	7785
	483	8018
	496	8247
	510	8476
	524	8705
	538	8934
	552	9163
	565	9403
	579	9644
	593	9885
	607	10126
	621	10367
	634	10592
	648	10818
	662	11044
	676	11270
	689	11496

Hex Range 91-120mm	Metric Conversion	
	Bar	Nm
	69	1325
	83	1592
	97	1858
	110	2124
	124	2391
	138	2657
	152	2924
	165	3191
	179	3458
	193	3725
	207	3992
	221	4257
	234	4522
	248	4787
	262	5052
	276	5317
	290	5578
	303	5840
	317	6101
	331	6362
	345	6624
	359	6890
	372	7157
	386	7423
	400	7690
	414	7957
	427	8227
	441	8498
	455	8768
	469	9038
	483	9309
	496	9575
	510	9840
	524	10106
	538	10372
	552	10637
	565	10917
	579	11196
	593	11476
	607	11755
	621	12035
	634	12297
	648	12559
	662	12822
	676	13084
	689	13346

*Reference values only. Consult calibration torque chart provided with tool.

TXU-16 Torque Conversion Chart (Imperial)

Hex Range 2 3/16" - 3 15/16"	Imperial Conversion	
	PSI	Ft-lbs
	1,000	1627
	1,200	1931
	1,400	2234
	1,600	2538
	1,800	2842
	2,000	3145
	2,200	3448
	2,400	3752
	2,600	4055
	2,800	4358
	3,000	4661
	3,200	4965
	3,400	5269
	3,600	5573
	3,800	5876
	4,000	6180
	4,200	6483
	4,400	6785
	4,600	7087
	4,800	7389
	5,000	7692
	5,200	8001
	5,400	8311
	5,600	8620
	5,800	8930
	6,000	9239
	6,200	9553
	6,400	9866
	6,600	10180
	6,800	10494
	7,000	10808
	7,200	11111
	7,400	11415
	7,600	11719
	7,800	12023
	8,000	12326
	8,200	12646
	8,400	12966
	8,600	13286
	8,800	13606
	9,000	13926
	9,200	14245
	9,400	14563
	9,600	14881
	9,800	15200
	10,000	15518

Hex Range 4" - 4 11/16"	Imperial Conversion	
	PSI	Ft-lbs
	1,000	1773
	1,200	2104
	1,400	2435
	1,600	2765
	1,800	3096
	2,000	3427
	2,200	3757
	2,400	4088
	2,600	4418
	2,800	4749
	3,000	5079
	3,200	5410
	3,400	5741
	3,600	6072
	3,800	6403
	4,000	6734
	4,200	7063
	4,400	7393
	4,600	7722
	4,800	8052
	5,000	8381
	5,200	8718
	5,400	9055
	5,600	9393
	5,800	9730
	6,000	10067
	6,200	10409
	6,400	10751
	6,600	11092
	6,800	11434
	7,000	11776
	7,200	12107
	7,400	12438
	7,600	12769
	7,800	13100
	8,000	13431
	8,200	13780
	8,400	14128
	8,600	14477
	8,800	14825
	9,000	15174
	9,200	15521
	9,400	15868
	9,600	16215
	9,800	16562
	10,000	16909

Hex Range 4 3/4" - 5 5/16"	Imperial Conversion	
	PSI	Ft-lbs
	1,000	2075
	1,200	2462
	1,400	2849
	1,600	3236
	1,800	3623
	2,000	4011
	2,200	4397
	2,400	4784
	2,600	5170
	2,800	5557
	3,000	5944
	3,200	6331
	3,400	6719
	3,600	7106
	3,800	7493
	4,000	7881
	4,200	8266
	4,400	8652
	4,600	9037
	4,800	9423
	5,000	9808
	5,200	10203
	5,400	10597
	5,600	10992
	5,800	11387
	6,000	11781
	6,200	12181
	6,400	12581
	6,600	12981
	6,800	13381
	7,000	13781
	7,200	14168
	7,400	14556
	7,600	14943
	7,800	15331
	8,000	15718
	8,200	16126
	8,400	16534
	8,600	16942
	8,800	17350
	9,000	17758
	9,200	18164
	9,400	18570
	9,600	18976
	9,800	19382
	10,000	19788

*Reference values only. Consult calibration torque chart provided with tool.

TXU-16 Torque Conversion Chart (Metric)

Hex Range 55-100mm	Metric Conversion	
	Bar	Nm
	69	2206
	83	2618
	97	3029
	110	3441
	124	3853
	138	4264
	152	4675
	165	5087
	179	5498
	193	5909
	207	6320
	221	6732
	234	7144
	248	7555
	262	7967
	276	8379
	290	8789
	303	9199
	317	9609
	331	10019
	345	10429
	359	10848
	372	11268
	386	11687
	400	12107
	414	12527
	427	12952
	441	13377
	455	13802
	469	14228
	483	14653
	496	15065
	510	15477
	524	15889
	538	16301
	552	16712
	565	17146
	579	17580
	593	18014
	607	18447
	621	18881
	634	19313
	648	19745
	662	20177
	676	20608
	689	21040

Hex Range 101-117mm	Metric Conversion	
	Bar	Nm
	69	2404
	83	2852
	97	3301
	110	3749
	124	4198
	138	4646
	152	5094
	165	5542
	179	5990
	193	6438
	207	6886
	221	7335
	234	7784
	248	8233
	262	8681
	276	9130
	290	9577
	303	10023
	317	10470
	331	10917
	345	11363
	359	11820
	372	12277
	386	12735
	400	13192
	414	13649
	427	14112
	441	14576
	455	15039
	469	15503
	483	15966
	496	16415
	510	16864
	524	17312
	538	17761
	552	18210
	565	18683
	579	19155
	593	19628
	607	20101
	621	20573
	634	21044
	648	21514
	662	21985
	676	22455
	689	22926

Hex Range 118-135mm	Metric Conversion	
	Bar	Nm
	69	2813
	83	3338
	97	3863
	110	4388
	124	4913
	138	5438
	152	5962
	165	6486
	179	7010
	193	7534
	207	8059
	221	8584
	234	9109
	248	9634
	262	10159
	276	10685
	290	11207
	303	11730
	317	12253
	331	12775
	345	13298
	359	13833
	372	14368
	386	14903
	400	15438
	414	15973
	427	16515
	441	17058
	455	17600
	469	18142
	483	18685
	496	19210
	510	19735
	524	20260
	538	20785
	552	21311
	565	21864
	579	22417
	593	22970
	607	23523
	621	24076
	634	24627
	648	25177
	662	25728
	676	26278
	689	26829

*Reference values only. Consult calibration torque chart provided with tool.

TXU-32 Torque Conversion Chart (Imperial)

Hex Range 3 1/8" - 4 5/8"	Imperial Conversion	
	PSI	Ft-lbs
	1,000	3472
	1,200	4132
	1,400	4791
	1,600	5451
	1,800	6111
	2,000	6771
	2,200	7422
	2,400	8073
	2,600	8724
	2,800	9375
	3,000	10026
	3,200	10684
	3,400	11342
	3,600	12001
	3,800	12659
	4,000	13317
	4,200	13967
	4,400	14618
	4,600	15268
	4,800	15918
	5,000	16569
	5,200	17222
	5,400	17876
	5,600	18529
	5,800	19183
	6,000	19837
	6,200	20497
	6,400	21157
	6,600	21817
	6,800	22477
	7,000	23137
	7,200	23786
	7,400	24435
	7,600	25084
	7,800	25733
	8,000	26381
	8,200	27032
	8,400	27683
	8,600	28333
	8,800	28984
	9,000	29635
	9,200	30287
	9,400	30940
	9,600	31592
	9,800	32245
	10,000	32897

Hex Range 4 11/16" - 6 1/2"	Imperial Conversion	
	PSI	Ft-lbs
	1,000	3844
	1,200	4574
	1,400	5305
	1,600	6035
	1,800	6766
	2,000	7496
	2,200	8217
	2,400	8938
	2,600	9658
	2,800	10379
	3,000	11100
	3,200	11829
	3,400	12558
	3,600	13286
	3,800	14015
	4,000	14744
	4,200	15464
	4,400	16184
	4,600	16904
	4,800	17624
	5,000	18344
	5,200	19068
	5,400	19791
	5,600	20515
	5,800	21238
	6,000	21962
	6,200	22693
	6,400	23424
	6,600	24154
	6,800	24885
	7,000	25616
	7,200	26334
	7,400	27053
	7,600	27771
	7,800	28490
	8,000	29208
	8,200	29928
	8,400	30649
	8,600	31369
	8,800	32090
	9,000	32810
	9,200	33532
	9,400	34255
	9,600	34977
	9,800	35700
	10,000	36422

Hex Range 6 9/16" - 7 7/8"	Imperial Conversion	
	PSI	Ft-lbs
	1,000	4340
	1,200	5165
	1,400	5989
	1,600	6814
	1,800	7639
	2,000	8463
	2,200	9277
	2,400	10091
	2,600	10905
	2,800	11718
	3,000	12532
	3,200	13355
	3,400	14178
	3,600	15001
	3,800	15824
	4,000	16646
	4,200	17459
	4,400	18272
	4,600	19085
	4,800	19898
	5,000	20711
	5,200	21528
	5,400	22345
	5,600	23162
	5,800	23979
	6,000	24796
	6,200	25621
	6,400	26446
	6,600	27271
	6,800	28096
	7,000	28921
	7,200	29732
	7,400	30543
	7,600	31355
	7,800	32166
	8,000	32977
	8,200	33790
	8,400	34603
	8,600	35417
	8,800	36230
	9,000	37044
	9,200	37859
	9,400	38675
	9,600	39490
	9,800	40306
	10,000	41122

*Reference values only. Consult calibration torque chart provided with tool.

TXU-32 Torque Conversion Chart (Metric)

Hex Range 80-119mm	Metric Conversion	
	Bar	Nm
	69	4707
	83	5602
	97	6496
	110	7391
	124	8285
	138	9180
	152	10062
	165	10945
	179	11828
	193	12710
	207	13593
	221	14486
	234	15378
	248	16271
	262	17163
	276	18056
	290	18937
	303	19819
	317	20701
	331	21583
	345	22464
	359	23350
	372	24236
	386	25123
	400	26009
	414	26895
	427	27790
	441	28685
	455	29580
	469	30475
	483	31370
	496	32249
	510	33129
	524	34009
	538	34889
	552	35768
	565	36651
	579	37533
	593	38415
	607	39297
	621	40179
	634	41064
	648	41949
	662	42833
	676	43718
	689	44603

Hex Range 120-165mm	Metric Conversion	
	Bar	Nm
	69	5212
	83	6202
	97	7192
	110	8183
	124	9173
	138	10163
	152	11140
	165	12118
	179	13095
	193	14072
	207	15050
	221	16038
	234	17026
	248	18014
	262	19002
	276	19990
	290	20966
	303	21943
	317	22919
	331	23895
	345	24871
	359	25852
	372	26833
	386	27814
	400	28795
	414	29776
	427	30767
	441	31758
	455	32749
	469	33740
	483	34731
	496	35705
	510	36679
	524	37653
	538	38627
	552	39601
	565	40577
	579	41554
	593	42531
	607	43508
	621	44484
	634	45464
	648	46443
	662	47423
	676	48402
	689	49382

Hex Range 166-200mm	Metric Conversion	
	Bar	Nm
	69	5884
	83	7002
	97	8120
	110	9238
	124	10357
	138	11475
	152	12578
	165	13681
	179	14785
	193	15888
	207	16991
	221	18107
	234	19223
	248	20338
	262	21454
	276	22570
	290	23672
	303	24774
	317	25876
	331	26978
	345	28080
	359	29188
	372	30296
	386	31403
	400	32511
	414	33619
	427	34737
	441	35856
	455	36975
	469	38093
	483	39212
	496	40312
	510	41411
	524	42511
	538	43611
	552	44711
	565	45813
	579	46916
	593	48019
	607	49122
	621	50224
	634	51330
	648	52436
	662	53542
	676	54648
	689	55753

*Reference values only. Consult calibration torque chart provided with tool.

TXU-2 Series Cylinder

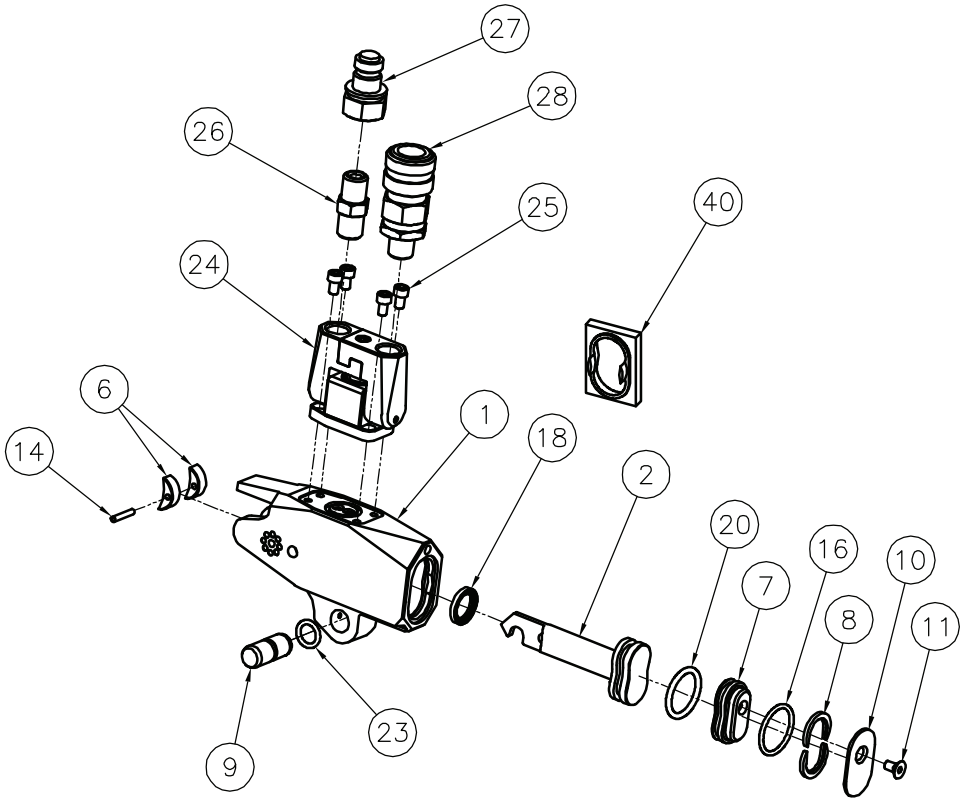

Part Numbers for Ordering

ITEM	NAME	PART #	QTY.
1	Housing	TXU-2-C01	1
2	Piston	TX-2-C03	1
6	Slider	TX-2-C09	2
7	End Cap	TXU-2-C11	1
8	Retaining Ring	TX-2-C13	2
9	Link Pin	TX-2-C15	1
10	End Cover	TXU-2-C17	1
11	End Cover Screw	TX-2-C23	1
14	Slider Pin	TX-2-C27	1
16	End Plug Seal	TX-2-C29	1
18	Rod Seal	TX-2-C31	1
20	Piston Seal	TX-2-C33	1
23	Link Retaining Spring	TX-2-C53	1
24	Uni-Swivel Assembly	USS-00	1
25	Uni-Swivel Post Screw	USS-21	4
26	Male 1/4" NPT Nipple	F004004	1
27	Male Coupler	HC-M-100	1
28	Female Coupler	HC-F-400	1
40	Seal Insertion Tool	ATX-2-ST	
	Coupler Set (27 & 28)	HC-S-100	

TXU-2 Series Link

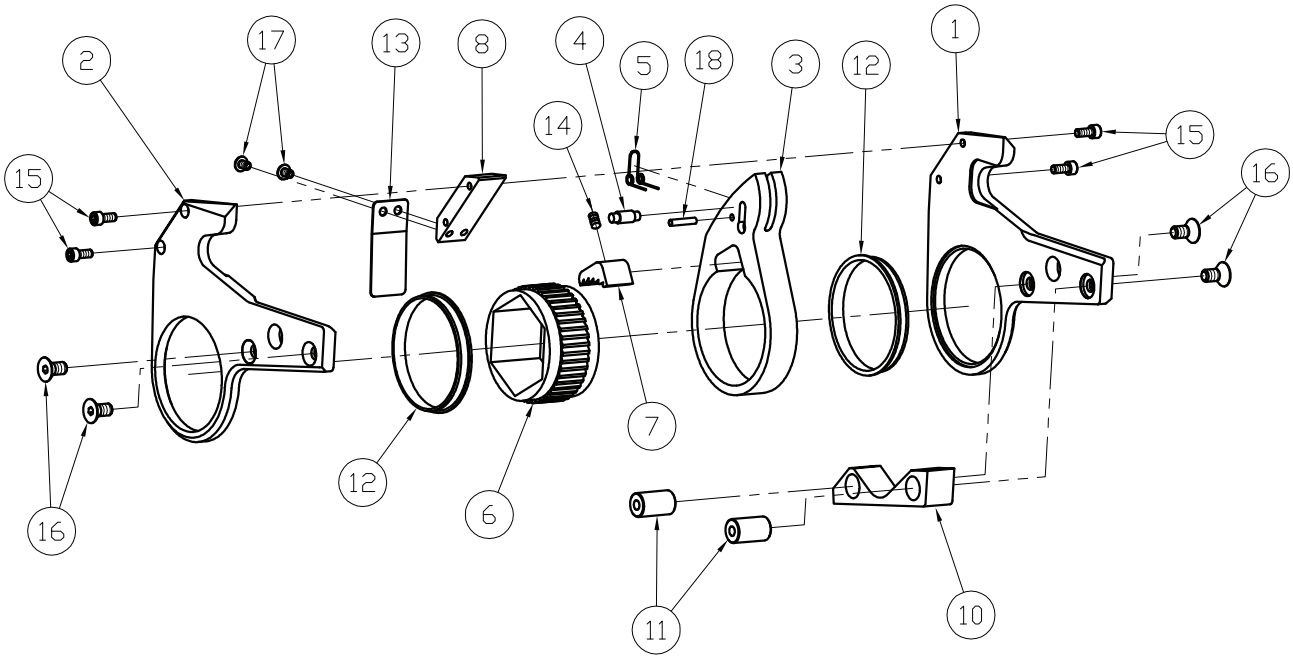

Part Numbers for Ordering

ITEM	NAME	PART #	QTY.
1	Side Plate - Left	TX-2-L01-#*	1
2	Side Plate - Right	TX-2-L02-#*	1
3	Drive Plate	TX-2-L03-#*	1
4	Drive Pin	TX-2-L05	1
5	Drive Pin Spring	TX-2-L07	1
6	Ratchet	TX-2-L09-#*	1
7	Drive Segment	TX-2-L11-#*	1
8	Upper Spacer	TX-2-L13-#*	1
10	Lower Spacer	TX-2-L15-#*	1
11	Spacer Pin	TX-2-L17	2
12	Sideplate Sleeve	TX-2-L19-#*	2
13	Shroud	TX-2-L21	1
14	Segment Spring	TX-2-L25	1
15	Upper Spacer Screw	TX-2-L27	4
16	Lower Spacer Screw	TX-2-L29	4
17	Shroud Screw	TX-2-L31	2
18	Drive Pin Spring Roll Pin	TX-2-L33	1

*part number is dependent upon ratchet link size

TXU-4 Series Cylinder

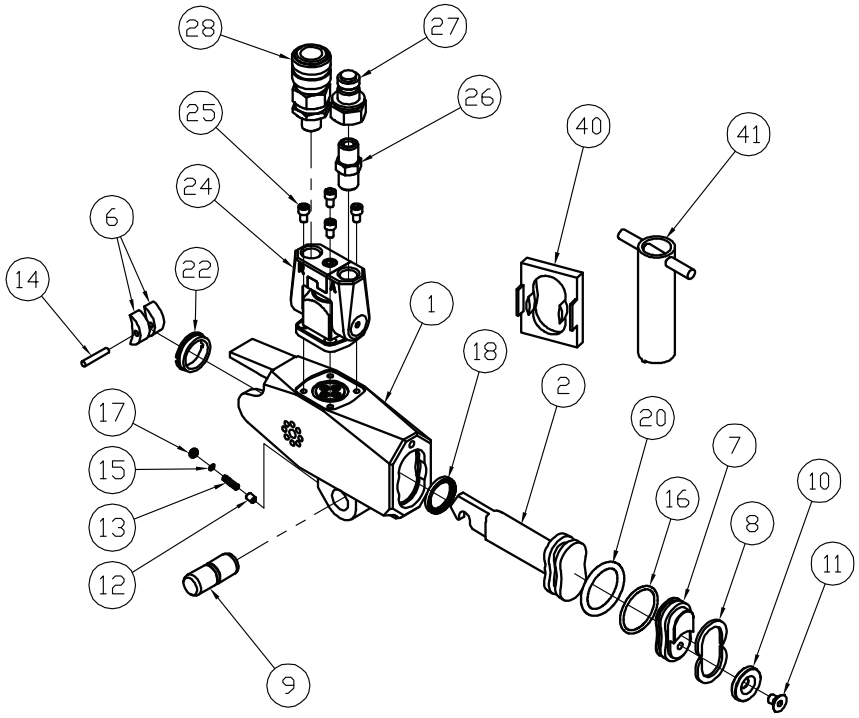

Part Numbers for Ordering

ITEM	NAME	PART #	QTY.
1	Housing	TXU-4-C01	1
2	Piston	TX-4-C03	1
6	Slider	TX-4-C09	2
7	End Cap	TXU-4-C11	1
8	Retaining Ring	TX-4-C13	2
9	Link Pin	TX-4-C15	1
10	End Cover	TX-4-C17	1
11	End Cover Screw	TX-4-C23	1
12	Link Pin Retainer	TX-4-C24	1
13	Plunger Spring	TX-4-C26	1
14	Slider Pin	TX-4-C27	1
15	Pin Retainer Washer	TX-4-C28	1
16	End Plug Seal	TX-4-C29	1
17	Pin Retainer Screw	TX-4-C30	1
18	Rod Seal	TX-4-C31	1
20	Piston Seal	TX-4-C33	1
22	Cylinder Gland	TX-4-C51	1
24	Uni-Swivel Assembly	USL-00	1
25	Uni-Swivel Post Screw	USL-23	4
26	Male 1/4" NPT Nipple	F004004	1
27	Male Coupler	HC-M-100	1
28	Female Coupler	HC-F-400	1
40	Seal Insertion Tool	ATX-4-ST	
41	Gland Removal Tool	ATX-4-GW	

TXU-4 Series Link

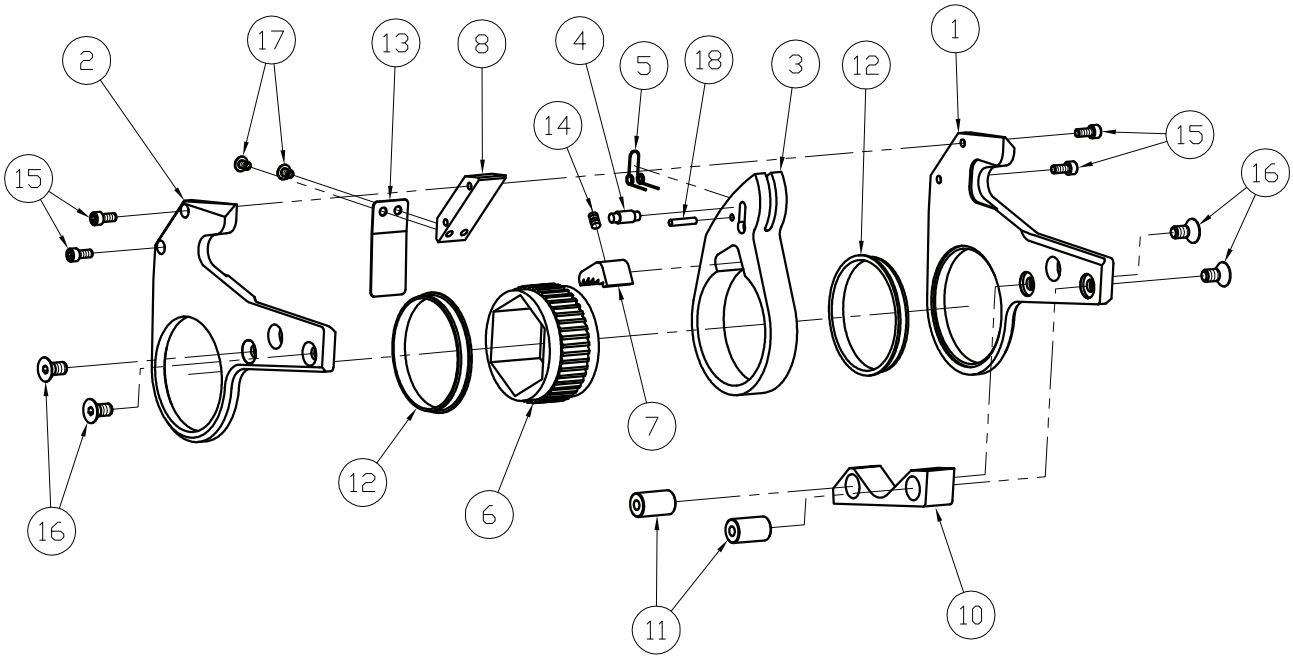

Part Numbers for Ordering

ITEM	NAME	PART #	QTY.
1	Side Plate - Left	TX-4-L01-#*	1
2	Side Plate - Right	TX-4-L02-#*	1
3	Drive Plate	TX-4-L03-#*	1
4	Drive Pin	TX-4-L05	1
5	Drive Pin Spring	TX-4-L07	1
6	Ratchet	TX-4-L09-#*	1
7	Drive Segment	TX-4-L11-#*	1
8	Upper Spacer	TX-4-L13-#*	1
10	Lower Spacer	TX-4-L15-#*	1
11	Spacer Pin	TX-4-L17	2
12	Sideplate Sleeve	TX-4-L19-#*	2
13	Shroud	TX-4-L21	1
14	Segment Spring	TX-4-L25	1
15	Upper Spacer Screw	TX-4-L27	4
16	Lower Spacer Screw	TX-4-L29	4
17	Shroud Screw	TX-4-L31	2
18	Drive Pin Spring Roll Pin	TX-4-L33	1

*part number is dependent upon ratchet link size

TXU-8 Series Cylinder

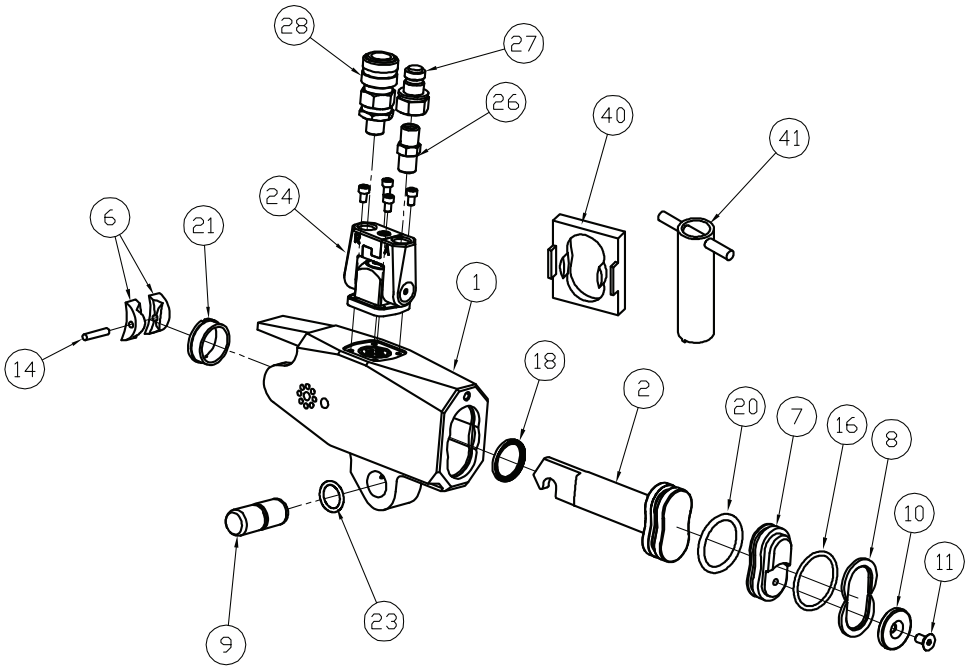

Part Numbers for Ordering

ITEM	NAME	PART #	QTY.
1	Housing	TXU-8-C01	1
2	Piston	TX-8-C03	1
6	Slider	TX-8-C09	2
7	End Cap	TXU-8-C11	1
8	Retaining Ring	TX-8-C13	2
9	Link Pin	TX-8-C15	1
10	End Cover	TX-8-C17	1
11	End Cover Screw	TX-8-C23	1
14	Slider Pin	TX-8-C27	1
16	End Plug Seal	TX-8-C29	1
18	Rod Seal	TX-8-C31	1
20	Piston Seal	TX-8-C33	1
22	Cylinder Gland	TX-8-C51	1
23	Link Retaining Spring	TX-8-C53	1
24	Uni-Swivel Assembly	USL-00	1
25	Uni-Swivel Post Screw	USL-23	4
26	Male 1/4" NPT Nipple	F004004	1
27	Male Coupler	HC-M-100	1
28	Female Coupler	HC-F-400	1
40	Seal Insertion Tool	ATX-8-ST	
41	Gland Removal Tool	ATX-8-GW	
	Coupler Set (27 & 28)	HC-S-100	

TXU-8 Series Link

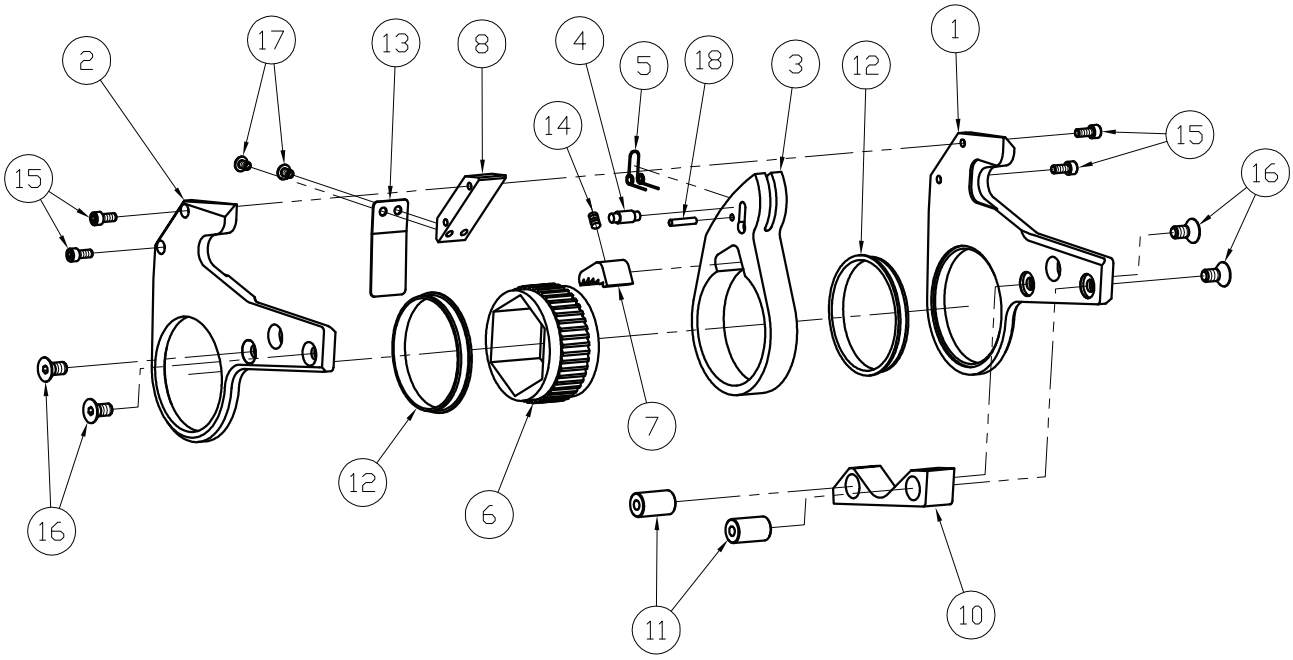

Part Numbers for Ordering

ITEM	NAME	PART #	QTY.
1	Side Plate - Left	TX-8-L01-#*	1
2	Side Plate - Right	TX-8-L02-#*	1
3	Drive Plate	TX-8-L03-#*	1
4	Drive Pin	TX-8-L05	1
5	Drive Pin Spring	TX-8-L07	1
6	Ratchet	TX-8-L09-#*	1
7	Drive Segment	TX-8-L11-#*	1
8	Upper Spacer	TX-8-L13-#*	1
10	Lower Spacer	TX-8-L15-#*	1
11	Spacer Pin	TX-8-L17	2
12	Sideplate Sleeve	TX-8-L19-#*	2
13	Shroud	TX-8-L21	1
14	Segment Spring	TX-8-L25	1
15	Upper Spacer Screw	TX-8-L27	4
16	Lower Spacer Screw	TX-8-L29	4
17	Shroud Screw	TX-8-L31	2
18	Drive Pin Spring Roll Pin	TX-8-L33	1

*part number is dependent upon ratchet link size

TXU-16 Series Cylinder

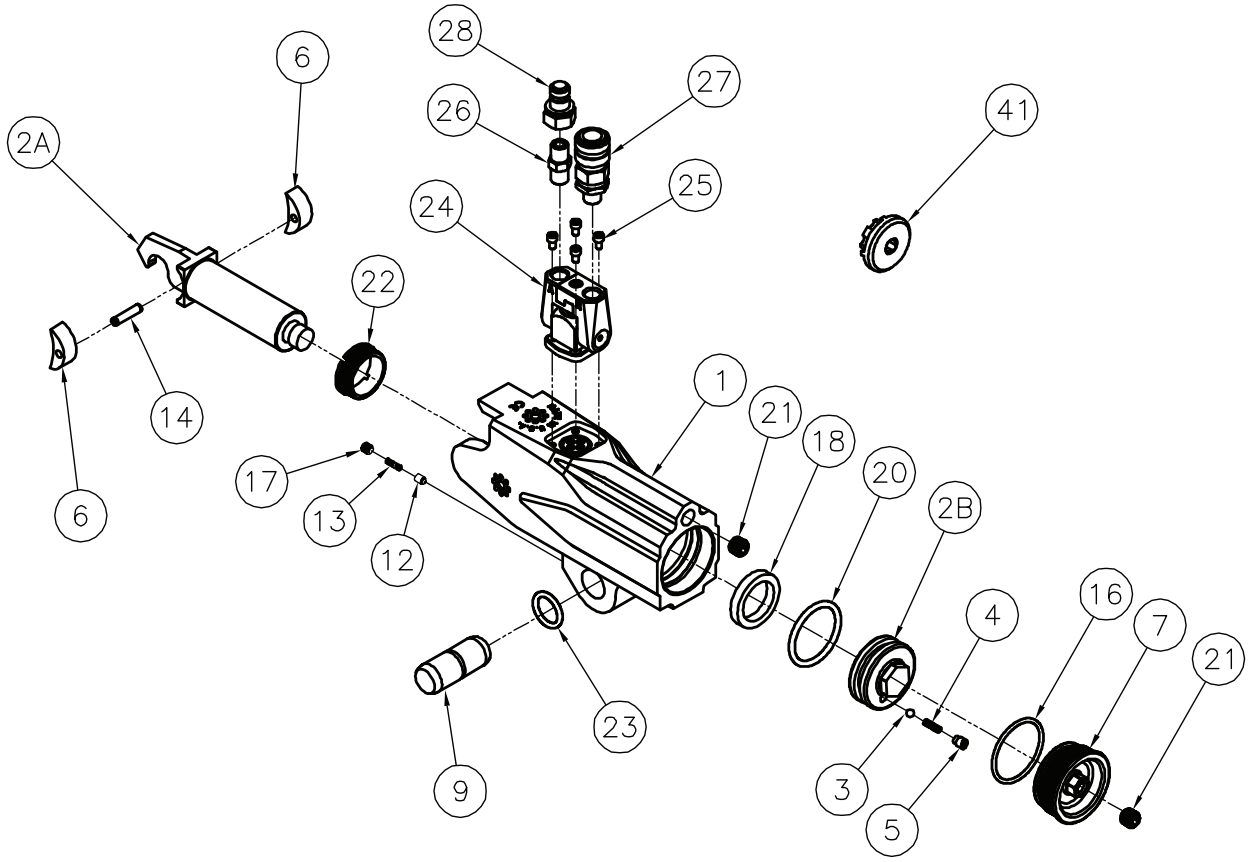

Part Numbers for Ordering

ITEM	NAME	PART #	QTY.
1	Housing	TX-16-C01	1
2a	Piston Rod	TX-16-C03-1	1
2b	Piston Cap	TX-16-C03-2	1
3	Valve Ball	TX-16-C03-3	1
4	Valve Spring	TX-16-C03-4	1
5	Valve Cup	TX-16-C03-5	1
6	Slider	TX-16-C09	2
7	End Cap	TX-16-C11	1
9	Link Pin	TX-16-C15	1
14	Slider Pin	TX-16-C27	1
16	End Plug Seal	TX-16-C29	1
18	Rod Seal	TX-16-C31	1
20	Piston Seal	TX-16-C33	1

ITEM	NAME	PART #	QTY.
21	Port Plug	TXU-16-C38	1
22	Cylinder Gland	TX-16-C51	1
23	Link Retaining Spring	TX-16-C53	1
24	Uni-Swivel Assembly	USL-00	1
25	Uni-Swivel Post Screw	USL-23	4
26	Male 1/4" NPT Nipple	F004004	1
27	Male Coupler	HC-M-100	1
28	Female Coupler	HC-F-400	1
41	Gland Removal Tool	ATX-16-GW	
	Piston Assembly (2A, 2B, 3, 4, 5)	TX-16-C03	
	Coupler Set (27 & 28)	HC-S-100	

TXU-16 Series Link

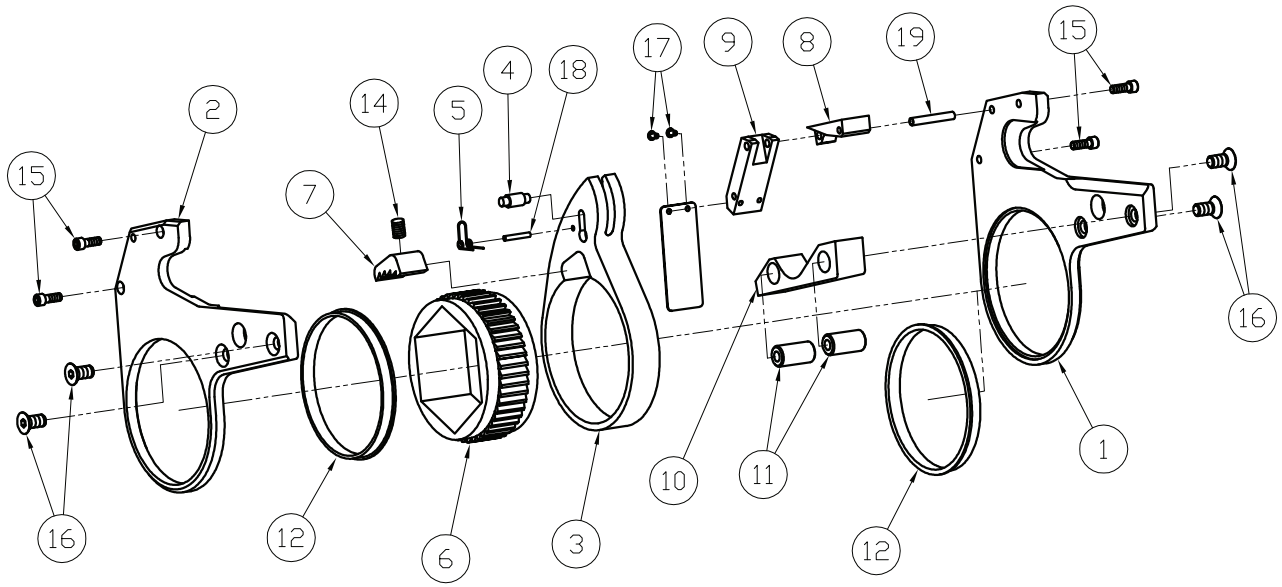

Part Numbers for Ordering

ITEM	NAME	PART #	QTY.
1	Side Plate - Left	TX-16-L01-#*	1
2	Side Plate - Right	TX-16-L02-#*	1
3	Drive Plate	TX-16-L03-#*	1
4	Drive Pin	TX-16-L05	1
5	Drive Pin Spring	TX-16-L07	1
6	Ratchet	TX-16-L09-#*	1
7	Drive Segment	TX-16-L11-#*	1
8	Upper Spacer	TX-16-L13	1
9	Middle Spacer	TX-16-L14-#*	1
10	Lower Spacer	TX-16-L15-#*	1
11	Spacer Pin	TX-16-L17	2
12	Sideplate Sleeve	TX-16-L19-#*	2
13	Shroud	TX-16-L21	1
14	Segment Spring	TX-16-L25	1
15	Upper Spacer Screw	TX-16-L27	4
16	Lower Spacer Screw	TX-16-L29	4
17	Shroud Screw	TX-16-L31	2
18	Drive Pin Spring Roll Pin	TX-16-L33	1
19	Spacer Roll Pin	TX-16-L35	1

*part number is dependent upon ratchet link size

TXU-32 Series Cylinder

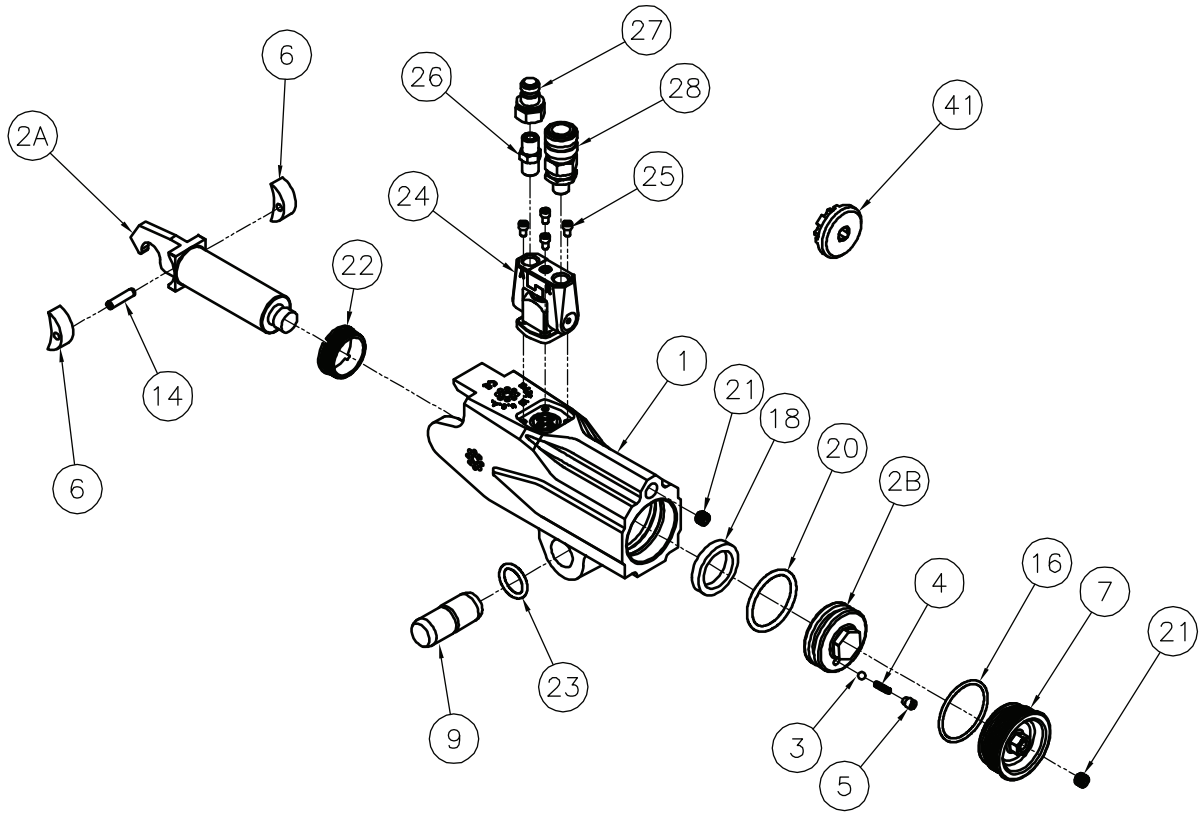

Part Numbers for Ordering

ITEM	NAME	PART #	QTY.
1	Housing	TX-32-C01	1
2a	Piston Rod	TX-32-C03-1	1
2b	Piston Cap	TX-32-C03-2	1
3	Valve Ball	TX-32-C03-3	1
4	Valve Spring	TX-32-C03-4	1
5	Valve Cup	TX-32-C03-5	1
6	Slider	TX-32-C09	2
7	End Cap	TX-32-C11	1
9	Link Pin	TX-32-C15	1
14	Slider Pin	TX-32-C27	1
16	End Plug Seal	TX-32-C29	1
18	Rod Seal	TX-32-C31	1
20	Piston Seal	TX-32-C33	1
21	Port Plug	TXU-32-C38	2

ITEM	NAME	PART #	QTY.
22	Cylinder Gland	TX-32-C51	1
23	Link Retaining Ring	TX-32-C53	1
24	Uni-Swivel Assembly	USL-00	1
25	Uni-Swivel Post Screw	USL-23	4
26	Male 1/4" NPT Nipple	F004004	1
27	Male Coupler	HC-M-100	1
28	Female Coupler	HC-F-400	1
41	Gland Removal Tool	ATX-32-GW	
	Piston Assembly (2a, 2b, 3, 4, 5)	TX-32-C03	
	Coupler Set (27 & 28)	HC-S-100	

TXU-32 Series Link

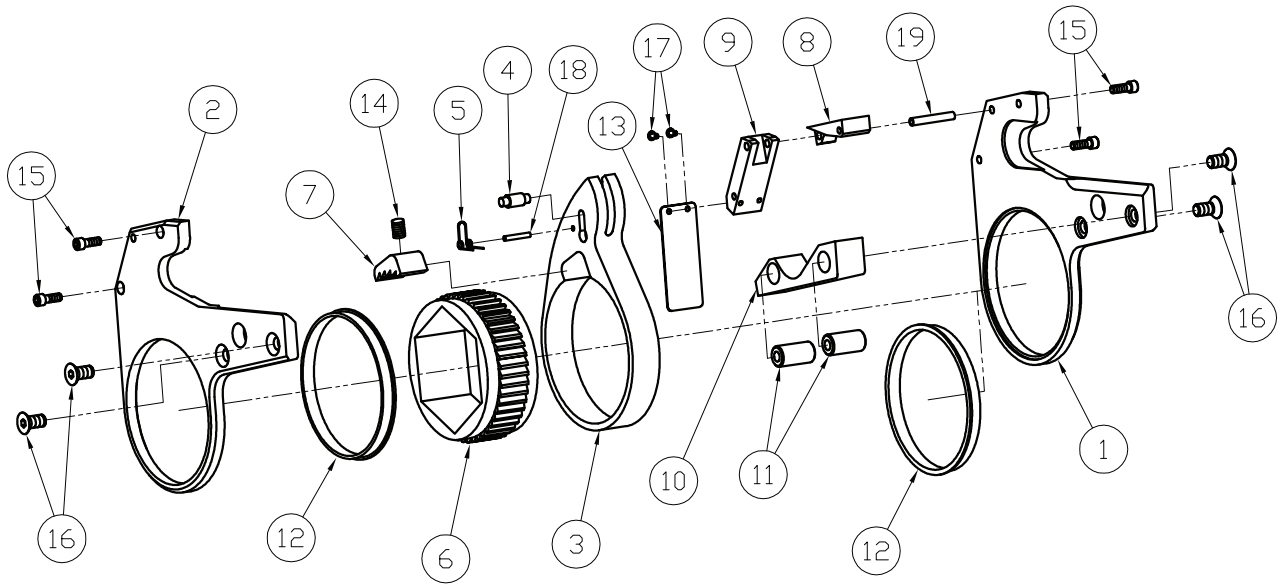

Part Numbers for Ordering

ITEM	NAME	PART #	QTY.
1	Side Plate - Left	TX-32-L01- #*	1
2	Side Plate - Right	TX-32-L02- #*	1
3	Drive Plate	TX-32-L03- #*	1
4	Drive Pin	TX-32-L05	1
5	Drive Pin Spring	TX-32-L07	1
6	Ratchet	TX-32-L09- #*	1
7	Drive Segment	TX-32-L11- #*	1
8	Upper Spacer	TX-32-L13	1
9	Middle Spacer	TX-32-L14- #*	1
10	Lower Spacer	TX-32-L15- #*	1
11	Spacer Pin	TX-32-L17	2
12	Sideplate Sleeve	TX-32-L19- #*	2
13	Shroud	TX-32-L21	1
14	Segment Spring	TX-32-L25	1
15	Upper Spacer Screw	TX-32-L27	4
16	Lower Spacer Screw	TX-32-L29	4
17	Shroud Screw	TX-32-L31	2
18	Dr. Pin Spring Roll Pin	TX-32-L33	1
19	Spacer Roll Pin	TX-32-L35	1

*part number is dependent upon ratchet link size

TXU Series USS Uni-Swivel

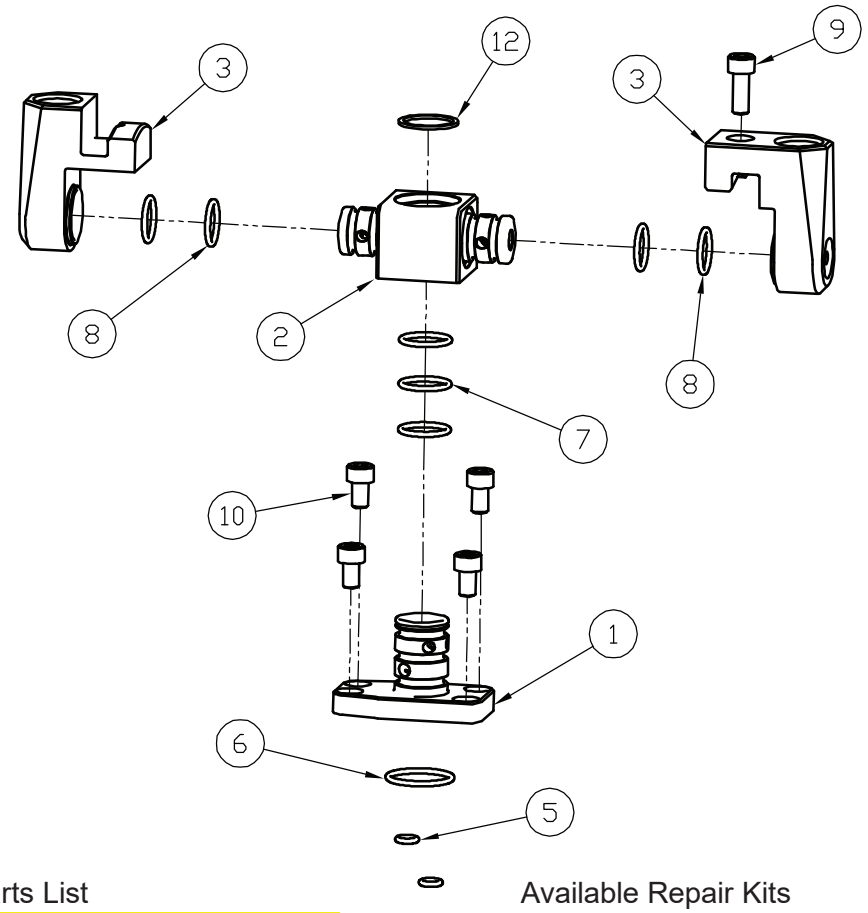

USS Uni-Swivel Parts List

ITEM	NAME	PART #
1	Post	USS-01
2	Joint	USS-03
3	Swivel Arm Set	USS-05
5	Swivel O-ring (Small)	USS-09
6	Swivel O-ring (Large)	USS-11
7	Post O-ring	USS-13
8	Joint O-ring	USS-15
9	Swivel Screw	USS-17
10	Swivel Post Screw	USS-21
12	Retaining Ring	USS-19

Available Repair Kits

Post Kit USS-PKIT

ITEM	NAME	PART #
1	Post	USS-01
5	Swivel O-ring (Small)	USS-09
6	Swivel O-ring (Large)	USS-11
7	Post O-ring	USS-13
10	Swivel Post Screw	USS-21

Joint Kit USS-JKIT

ITEM	NAME	PART #
2	Joint	USS-03
3	Swivel Arm Set	USS-05
7	Post O-ring	USS-13
8	Joint O-ring	USS-15
9	Swivel Screw	USS-17
12	Retaining Ring	USS-19

Seal Kit USS-SKIT

ITEM	NAME	PART #
5	Swivel O-ring (Small)	USS-09
6	Swivel O-ring (Large)	USS-11
7	Post O-ring	USS-13
8	Joint O-ring	USS-15
10	Swivel Post Screw	USS-21

TXU Series USL Uni-Swivel

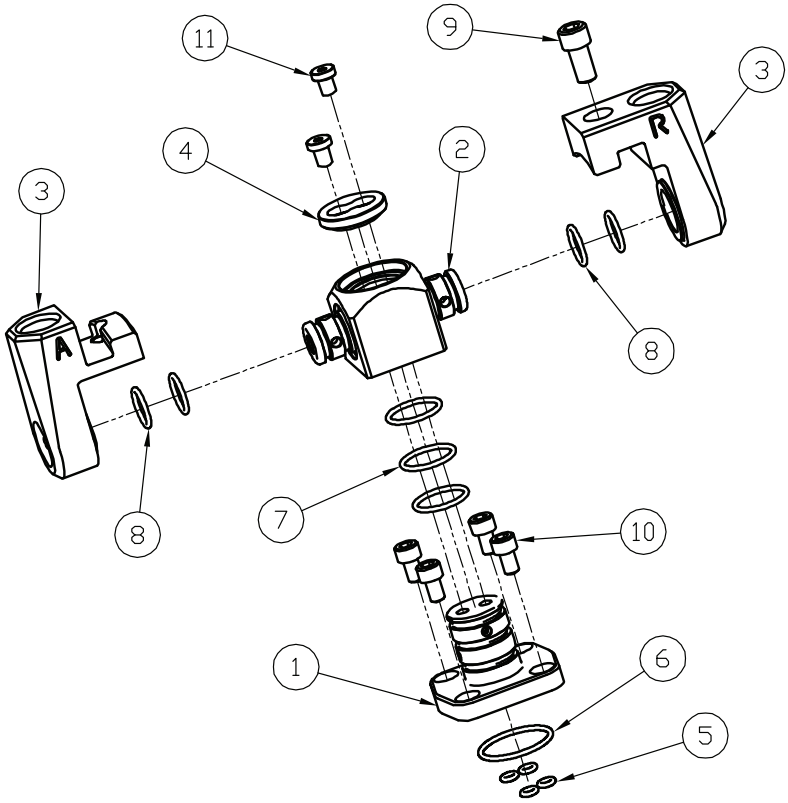

USL Uni-Swivel Parts List

ITEM	NAME	PART #
1	Post	USL-01
2	Joint	USL-03
3	Swivel Arm Set	USL-05
4	Cap	USL-09
5	Swivel O-ring (Small)	USL-11
6	Swivel O-ring (Large)	USL-13
7	Post O-ring	USL-15
8	Joint O-ring	USL-17
9	Swivel Screw	USL-19
10	Swivel Post Screw	USL-23
11	Cap Screw	USL-21

Available Repair Kits

Post Kit USL-PKIT

ITEM	NAME
1	Post
5	Swivel O-ring (Small)
6	Swivel O-ring (Large)
7	Post O-ring
10	Swivel Post Screw

Joint Kit USL-JKIT

ITEM	NAME
2	Joint
3	Swivel Arm Set
4	Cap
7	Post O-ring
8	Joint O-ring
9	Swivel Screw
11	Cap Screw

Seal Kit USL-SKIT

ITEM	NAME
5	Swivel O-ring (Small)
6	Swivel O-ring (Large)
7	Post O-ring
8	Joint O-ring
10	Swivel Post Screw
11	Cap Screw

TXU Series Uni-Swivel Assembly

1. Clamp the post (1) in a copper-covered or leather-covered vice by the base.
2. Slide the post O-rings (7) onto the post starting from the top to the base.
3. Lightly lubricate the post. (Ref. pg. 4)
4. Using hand pressure, press the joint (2) onto the post until it makes contact with the base of the post and until the top of the post is flush with the top of the joint.
5. **For USS uni-swivels:** install the retaining ring (2) into the groove on the top of the post by spreading it open slightly and working it around the post. **For USL uni-swivels:** install the cap (4) and secure with the cap screws (11).
6. Slide the joint O-rings (8) onto the arms of the joint from outside to inside.
7. Lightly lubricate the arms of the joint. (Ref. pg. 4)
8. Using hand pressure, press the swivel arms (3) onto the joint. **Note:** One of the arms of the joint has an 'R' engraved on the end denoting that it is the retract side. Install the retract swivel, the arm engraved with a 'R', onto this arm.
9. Swing the arms together so they interlock and fasten them together with the swivel screw (9).
10. Install the large and small swivel O-rings (5 & 6) into their glands in the cylinder housing.
11. Install the uni-swivel assembly onto the cylinder housing with the swivel post screws (10).

MAINTENANCE SECTION

WARNING **Always turn off the power supply. Bleed off hydraulic fluid from the hose connections on the cylinder assembly and disconnect the hoses before attempting to repair or perform maintenance on this tool. Always wear eye protection when operating or performing maintenance on this tool.**

DISASSEMBLY

GENERAL INSTRUCTIONS

1. Do not disassemble the tool any further than necessary to replace or repair damaged parts.
2. Use extra care not to score, nick or damage surfaces that will contain hydraulic oil under pressure.
3. Whenever grasping a tool in a vise, always use leather–covered or copper–covered vise jaws to protect the surface of the part and help prevent distortion. This is particularly true of threaded members and housings.
4. Do not remove any part that is press fit in or on an assembly unless the removal of that part is necessary for repairs or replacement.
5. Do not disassemble the hydraulic cylinder assembly unless you have a complete set of seals and O–rings for replacement.
6. Use only British Standard fractional size tools when disassembling these tools.

DISASSEMBLY OF THE TOOL

1. Push the link pin (9) out of the cylinder housing (1) and link side plates (1 & 2).
2. Lift the housing from between the side plates and separate the two units.

DISASSEMBLY OF THE TXU-2, TXU-4, AND TXU-8 CYLINDER ASSEMBLIES

1. Clamp the housing (1) in copper-covered or leather-covered vise jaws with the uni-swivel upward. Using a hex wrench, unscrew the four uniswivel post screws (24) that clamp the uni-swivel to the housing. Collect the O-rings (three for the TXU-2, five for the TXU-4 and TXU-8).
2. Remove the housing from the vise and turn it over a container to catch any oil remaining inside the cylinder.
3. Place the tool with the slider pin hole over a clearance opening and use a small drift to tap the slider pin (14) out of the sliders (6) and piston (2). Re-clamp the housing in the vise with the end cover (10) end upward.
4. Use a hex wrench to unscrew and remove the end cover screw (11). Remove the end cover (10).
5. Tap the end cap (7) inward approximately 1/2” and remove the two retaining rings (8) by working them out of the groove in the cylinder. **Note:** Covering the oil ports with a cloth will contain any oil that may expel from the housing.

CAUTION **The purpose of the seal insertion tool in the following step is to prevent the end plug seal from expanding into the retaining ring groove. If the tool is not used, place two thin pieces of flat stock at the midpoint of the opening against opposite walls to control the seal expansion.**

6. Install the seal insertion tool (40) into the end of the housing (1). **Note:** Lubricating the inside of the insertion tool will ease the removal of the piston (2) and end cap (7). (Ref. pg. 4)
7. Invert the tool above the vice, spreading the vice open enough to catch the end plug and piston. **Note:** Placing a cloth draped between the jaws of the vice will contain the exiting parts.
8. Tap the piston with a brass tap lightly until both the piston and end cap slip through the housing and into the catch cloth.
9. Use the gland removal tool (41) to unscrew and remove the cylinder gland (22) from the housing. **Note: TXU-2 does not have a cylinder gland.**

NOTICE	**During removal and after the piston shaft is removed; DO NOT grasp the round portion of the rod with any holding device that will damage the surface. Any nicks or scratches to the surface will allow hydraulic oil to leak from the cylinder when the tool is reassembled.**

DISASSEMBLY OF THE TXU-16 & TXU-32 CYLINDER ASSEMBLIES

1. Clamp the housing (1) in copper-covered or leather-covered vise jaws with the uni-swivel upward. Using a hex wrench, unscrew the four uniswivel post screws (25) that clamp the uni-swivel to the housing. Remove the uniswivel and O-rings.
2. Re-clamp the housing (1) in the vise with the end cap (7) upward.
3. Unscrew the end cap (7) from the housing.
4. Using a socket on the hex of the piston cap (2B), unscrew and remove the piston cap from the piston rod (2A).
5. Remove the housing (1) from the vise and turn over a container to empty any remaining oil from the housing.
6. Re-clamp the housing in the vise, end plug end upward.
7. Remove the piston rod (2A) from the housing. If necessary, tap the threaded end of the piston rod with a brass tap being careful not to damage the threads. Place a cloth between the jaws of the vice to contain the exiting parts.
8. Flip the housing in the vice so that the cylinder gland (22) is visible.
9. Use the gland removal tool (41) to unscrew the cyclinder gland (22) from the housing.
10. Place the slider pin in the piston rod over a clearance opening in a soft block, and use a small drift to tap the pin out of the sliders and piston rod.

DISASSEMBLY OF THE RATCHET LINK

1. Lay the ratchet link flat on a workbench with the left side plate (1) downward and using a hex wrench, unscrew and remove the two lower spacer screws (16).
2. Using a hex wrench, unscrew and remove the two upper spacer screws (15).
3. **For series TXU-16 and TXU-32**: Use a roll pin punch to tap the spacer roll pin (19) out of the right side plate (2).
4. While applying thumb pressure to the edge of the ratchet (6), carefully lift the side plate off the assembly.
5. Grasp the ratchet and drive plate (3) and, while maintaining their relationship, lift them both off the left side plate.
6. Push the Ratchet out of the drive plate and remove the drive segment (7) and the segment spring (14) from the drive plate recess.

NOTICE	**When the ratchet is removed from the drive plate, the drive segment and segment spring will be free to fall from the drive plate recess. Do not allow the drive segment to fall on a hard surface that might chip the teeth.**

7. If the drive pin (4) or drive pin spring (5) must be replaced, use a roll pin punch to push the drive pin spring roll pin (18) out of the drive plate. Once the pin spring is removed, the drive pin (4) will drop down to the large opening at the bottom of the slot for easy removal.
8. Lift the lower spacer (10) off the lower spacer pins (11). If the pins must be replaced, use a hex wrench to remove the two lower spacer screws from the right side plate. Pull the pins out of the holes on the inner face of the right side plate.

9. **For Series TXU-2, TXU-4, and TXU-8 models**: Unscrew the two spacer screws and remove the upper spacer (8) from the right side plate. **For Series TXU-16 and TXU-32 models:** Use a roll pin punch to remove the spacer roll pin (19) from the right side plate. Unscrew the two spacer screws and remove the middle spacer (9) and upper spacer (8) from the right side plate.
10. If the side plate sleeves (12) must be replaced, press the sleeves out toward the inner face of the side plate.

NOTICE **Inspect all parts prior to assembly. Replace any worn or damaged parts.**

ASSEMBLY

ASSEMBLY OF THE TXU-2, TXU-4 & TXU-8 CYLINDER ASSEMBLIES

1. Clamp the housing (1) in copper-covered or leather-covered vise jaws with the end cap end downward.
2. Apply a non-permanent thread-locking compound to the threads of the cylinder gland (22). Use the gland removal tool (41) to thread the bushing into the small central opening in the housing and tighten until flush with the housing (1). **Note: TXU-2 does not have a cylinder gland.**
3. Flip the housing (1) in the vise and install the seal insertion tool (40). **Note:** Lubricating the inside of the insertion tool and the sides of the piston rod assembly and end cap will ease installation. (Ref. pg. 4)
4. Insert the piston (2) into the seal insertion tool (41), notched end leading and toward the link pin hub, and tap into housing approximately 1”.
5. Insert the end cap (7), swivel inlet toward the link pin hub, into the seal insertion tool (40), and tap in until the piston (2) bottoms out against the housing (1).
6. Install retaining rings (8), tapered edge leading into the grooves in the housing.
7. Flip the housing in the vise and drive the piston (2) into the housing with a brass tap until the end cap (7) seats in the retaining rings (8).
8. Install the end cover (10), applying a non-permanent thread-locking compound to the end cover screw (11) threads.
9. Remove the housing from the vice and place on a soft block with the engraved side up.
10. Install sliders (6), one on each side of the piston (2). **For TX-8 models:** Install sliders with the cutout towards the piston. Align the holes in the sliders with the holes in the piston and the housing.
11. Install slider pin (14) until flush with top slider.
12. Apply moly grease to the face of the sliders and the notch in the piston.
13. Apply non-permanent, thread-locking compound to the threads of the cylinder, and install uni-swivel O-rings and uniswivel (USS for TXU-2 or USL for TXU-4 & 8), tightening uniswivel post screws (25) in a cross pattern.

ASSEMBLY OF TXU-16 and TXU-32 CYLINDER ASSEMBLIES

1. Press the slider pin (14) into one of the sliders (6) until flush with one side. Install the pin through the hole in the piston rod (2A) and press the remaining slider into the pin.
2. Clamp the housing (1) in copper-covered or leather-covered vise jaws with the end cap end downward.
3. Apply a non-permanent, thread-locking compound to the threads of the cylinder gland (22). Use the gland removal tool (41) to thread the gland into the small central opening in the housing and tighten until flush with the housing (1).
4. Insert the piston rod (2A), threaded end leading, into the small cylinder gland in the housing. The notch in the trailing end of the rod should be towards the retaining pin hub.
5. Insert the piston cap (2B), hex end trailing, into the bore of the housing and use a socket to thread and tighten the piston cap onto the piston rod.

6. Using a socket, thread the end cap (7), O-ring leading, into the bore of the housing and tighten.
7. Install uni-swivel O-rings and uni-swivel (USS for TXU-2 or USL for TXU-4 & TXU-8), tightening uni-swivel post screws (25) in a cross pattern. Apply non-permanent, thread-locking compound to the threads.
8. Apply moly grease to the face of the sliders and the notch in the piston.

ASSEMBLY OF THE RATCHET LINK

1. If the side plate sleeves (12) were removed, press new sleeves, shoulder end trailing, into the right and left side plates (1 & 2) from the inner face of the side plates. Make certain the sleeves are square with the side plate faces and the shoulder of the sleeves enters the recesses in the side plates and are pressed flush with the faces.
2. **For Series TXU-2, TXU-4, and TXU-8 models:** Position the upper spacer (8) against the inside face of the right side plate. Apply a non-permanent thread-locking compound to the threads of the two upper spacer screws (15) and secure the spacer with the screws through the side plate. **For Series TXU-16 and TXU-32 models:** Press the spacer roll pin (19) into the right side plate with one end of the pin flush with the external face of the side plate. Insert the tab of the upper spacer (8) into the slot in the middle spacer (9), and after aligning the holes in both pieces, install them on the spacer roll pin (19). When they are correctly positioned, apply a non-permanent thread-locking compound to the threads of the two upper spacer screws (15) and secure the spacers with the screws through the side plate.
3. Insert the two lower spacer pins (11) into the holes in the lower edge of the right side plate. Apply a non-permanent thread-locking compound to the threads of the lower spacer screws (16) and secure the pins with the screws through the side plate.
4. Place the lower spacer (10) over the pins against the side plate. Make certain it is correctly oriented so that no part of the spacer extends beyond the edge of the side plate.
5. Insert the drive pin (4) into the small cross-hole and slot in the drive plate (3). Invert the plate causing the ends of the pin to enter the slot and move the pin to the narrow end.
6. Position the drive pin spring (5) in the drive plate slot with the two non-connected ends between the drive pin and the large hole in the slot. Position the closed end of the spring on the opposite side of the pin. Then, apply pressure on the spring to align the hole through it with the hole in the drive plate for the drive pin spring roll pin (18). Insert the spring roll pin into the drive plate, through the spring and into the far wall of the drive plate.

NOTICE	**In the following step, an excessive amount of grease will prevent proper tooth engagement between the ratchet and the drive segment, causing the tool to malfunction.**

7. Wipe a thin film of Marine Moly Grease onto the inner face of the large opening in the drive plate.
8. Position the ratchet (6) in the central opening of the drive plate.
9. Insert the drive segment (7) into the opening adjacent to the ratchet. **Make certain the teeth of the ratchet correctly engage the teeth of the drive segment.** Reverse the ratchet if they do not properly engage.
10. Slide the drive segment sideways to expose the spring hole. Install the segment spring (14) into the hole. While compressing the spring, slide the drive segment inward until the drive plate captures the segment spring.
11. Apply a light coat of Marine Moly Grease to both sides of the drive plate and drive segment as well as the inner faces of both side plate sleeves (12).
12. While keeping the assembly together, insert the hub of the ratchet into the side plate sleeve of the assembled side plate.

13. Place the left side plate sleeve on the hub of the ratchet and align the screw holes for the spacers.
14. After applying a non-permanent, thread-locking compound to the threads. Use hex wrenches to install the two remaining lower spacer screws.

ASSEMBLY OF THE TOOL

1. With the cylinder assembly in one hand and the ratchet link in the other, hook the notch on the shaft of the cylinder piston rod (2) onto the link drive pin (4) and bring the two assemblies together.
2. Insert the link pin (9) into the hole in the link side plate (1 or 2) until the cylinder piston rod (2) snaps into the annular groove around the center of the link pin.

TROUBLESHOOTING GUIDE

Trouble	Probable Cause	Solution
Piston will not advance or retract	Couplers are not securely attached to the tool or pump	Check the coupler connections and make certain that they are connected.
	Coupler is defective	Replace any defective coupler.
	Defective remote control switch	Replace the switch and/ or control pendent.
	Dirt in the direction-control valve of the pump unit	Disassemble the pump and clean the direction-control valve.
Piston will not retract	Hose connections reversed	Make certain the advance on the pump is connected to the advance on the tool and retract on the pump is connected to the retract on the tool.
	Retract hose not connected	Connect the retract hose securely.
	Retract pin and/or spring broken	Replace the broken pin and/or spring.
Cylinder will not build up pressure	Internal seal leaking/or end plug seal leaking	Replace any defective o-rings.
	Retaining screws sheared	Replace any broken screws.
	Coupler is defective	Replace any defective coupler.
Ratchet will not turn	Grease or dirt build up in the teeth of the ratchet link and drive segment	Disassemble the ratchet and clean the grease or dirt out of the teeth.
	Worn or broken teeth on ratchet and/or drive segment	Replace any worn or damaged parts.
Tool tightens immediately when turned on	Hose connections are reversed	Depress the advance button to release the tool; shut the pump off in the advance position and reverse the hose connection.
Pump will not build up pressure	Defective relief valve	Inspect, adjust or replace the relief valve.
	Air supply too low or air hose too small	Make certain the air supply and hose size comply with the pump manual recommendations.
	Electric power source is too low	Make certain the amperage, voltage and any extension cord size comply with the pump manual requirements.
	Defective gauge	Replace the gauge.
	Low oil level	Check and fill the pump reservoir.
	Clogged filter	Inspect, clean and/or replace the pump filter.
Pressure reading erratic	Defective gauge	Replace the gauge.

SAVE THESE INSTRUCTIONS DO NOT DESTROY

NOTES:

1025 Conroy Place, Easton, PA. 18040 U.S.A.

Phone: +1 610-250-5800
Fax:+1 610-250-2700
Toll Free: 1-888-TORCUP-1
Email: sales@torcup.com
Website: www.torcup.com