TXU

torcUP

THE ALL AROUND SOLUTION

TXU LOW PROFILE TORQUE WRENCH

TXU

UNI-SWIVEL LOW PROFILE HYDRAULIC TORQUE WRENCH

THE WRENCH WITH A TWIST

NOT ONLY IS THE WRENCH ITSELF ROTATABLE AROUND EVERY APPLICATION ... SO IS THE UNI-SWIVEL. WE RE-WROTE THE BOOK WITH THE TXU WHEN IT COMES TO BEING THE MOST VERSATILE LIMITED CLEARANCE HYDRAULIC WRENCH. EVERY COMPONENT IS ENGINEERED FOR HIGH-TORQUE PERFORMANCE AND DURABILITY TO DELIVER JOB-SITE RESULTS ACCURATELY AND ON SCHEDULE. THE TXU IS THE ONLY TOOL IN THE JOB BOX THAT WILL GIVE YOU FREEDOM WHEN FACED WITH LIMITATIONS.

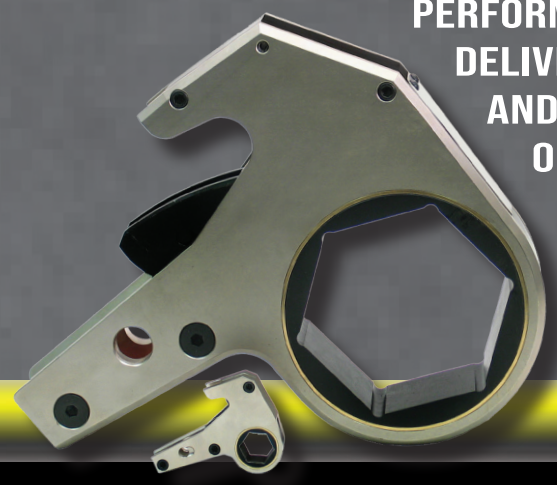

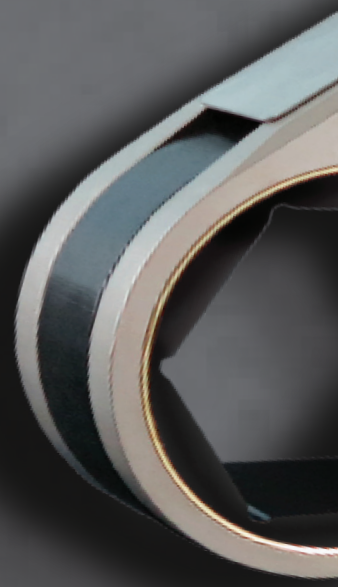

THE POWER INSIDE

1. PATENTED "PEANUT-SHAPED" CYLINDER
2. ENGAGEMENT ROD
3. NEVER-LOCK DRIVE PAWL
4. MULTI-TOOTH RATCHET
5. ONE PIECE DRIVE PLATE
6. LINK PIN
7. IN-LINE REACTION PAD
8. STEEL ALIGNMENT PIN
9. COMPLETELY FLAT DESIGN
10. QUICK CONNECT COUPLERS
11. 180° X 360° UNI-SWIVEL
12. PROPRIETARY PISTON SEAL
13. SLIDER PREVENTS WEAR OF PISTON

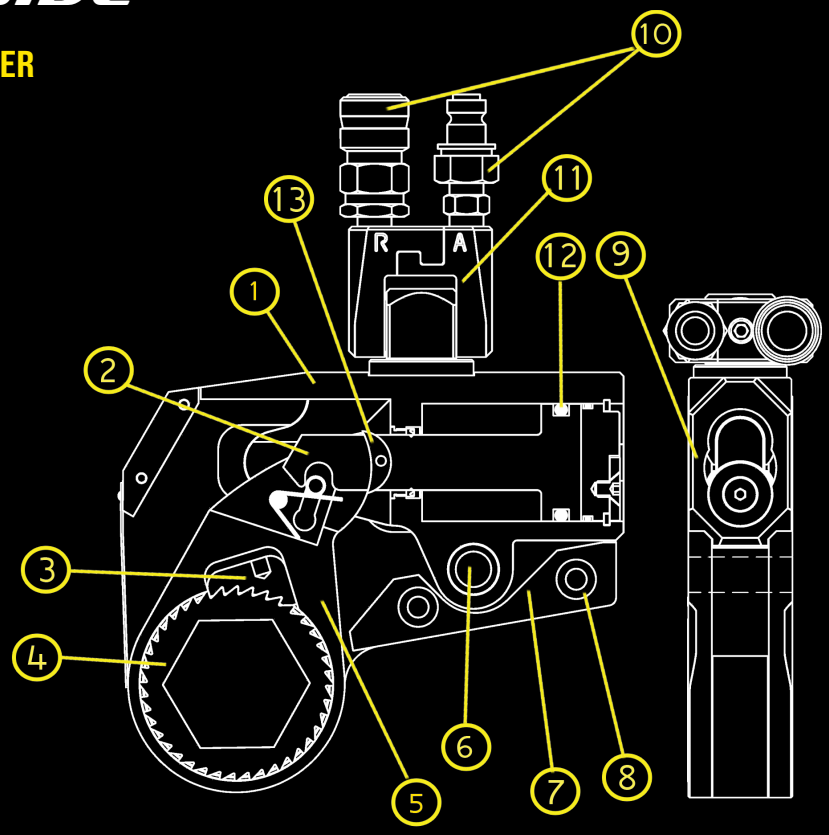

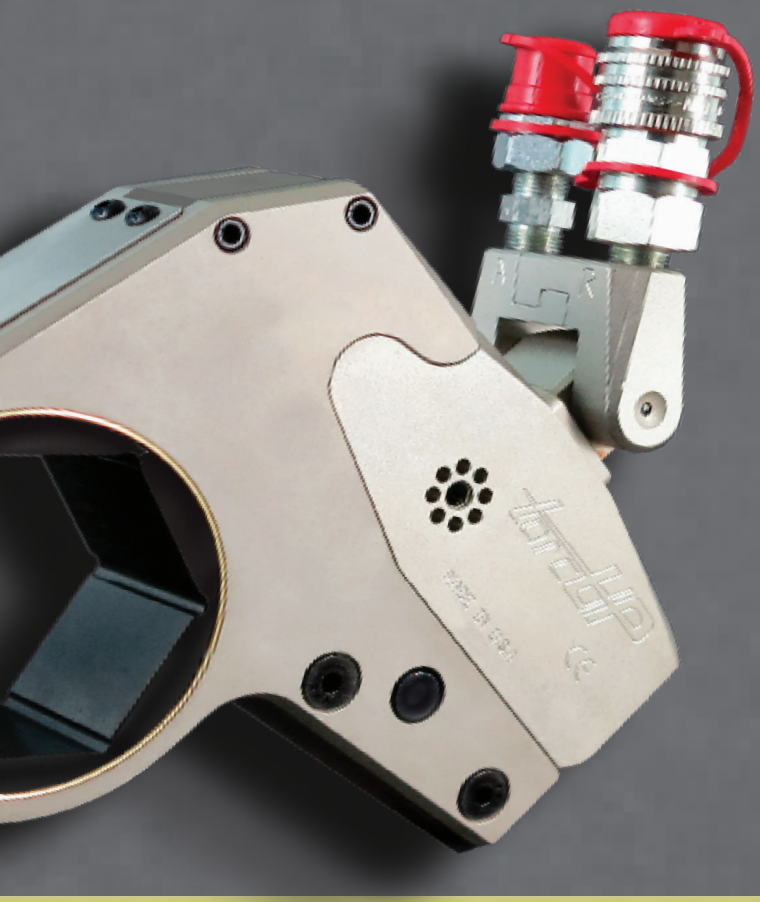

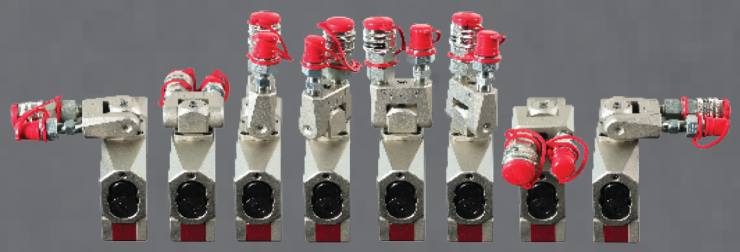

WWW.TORCUP.COM

POWER ENGINEERED

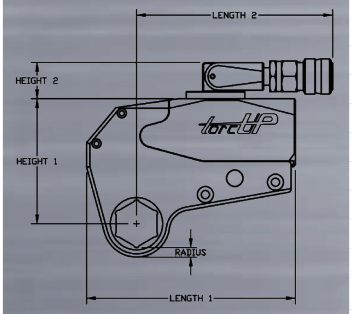

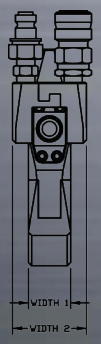

MODEL NUMBER	TXU-2	TXU-4	TXU-8	TXU-16	TXU-32
MIN. TORQUE (lbf-ft)*	240	472	800	1525	3500
MAX. TORQUE (lbf-ft)*	2320	4786	8800	16300	38100
MIN. TORQUE (nm)*	274	564	1033	1917	4476
MAX. TORQUE (nm)*	3199	6584	12055	22361	52220
CYLINDER WEIGHT (lbs)	4.0	6.9	12.5	16	27.1
CYLINDER WEIGHT (kg)	1.8	3.1	5.7	7.3	12.3
LINK WEIGHT FROM (lbs)	2.4	5.4	11.9	21.0	29.0
LINK WEIGHT TO (lbs)	3.5	7.6	14.5	28.0	35.5
LINK WEIGHT FROM (kgs)	1.0	2.4	5.5	9.5	13.0
LINK WEIGHT TO (kgs)	1.5	3.4	6.5	13.0	17.9
LENGTH 1 (in)	6.45	7.87	10.18	12.93	15.8
LENGTH 1 (mm)	163.8	199.9	258.6	328.4	401.3
LENGTH 2 (in)	5.99	6.58	7.34	8.2	9.31
LENGTH 2 (mm)	152.4	167.1	186.4	208.2	236.5
WIDTH 1 (in)	1.25	1.63	2.05	2.5	3.24
WIDTH 1 (mm)	31.8	41.4	52.1	63.5	82.3
WIDTH 2 (in)	2.19	2.26	2.26	2.26	2.26
WIDTH 2 (mm)	55.6	57.4	57.4	57.4	57.4
RADIUS RANGE FROM (in)	0.37	0.41	0.56	0.68	0.93
RADIUS RANGE TO (in)	0.59	0.77	0.93	1.68	
RADIUS RANGE FROM (mm)	9.6	10.5	14.2	17.1	23.6
RADIUS RANGE TO (mm)	15.0	18.7	21.0	25.9	
HEIGHT 1 (in)	3.39	4.93	6.18	7.58	9.5
HEIGHT 1 (mm)	86.3	125.2	157	192.5	241.3
HEIGHT 2 (in)	1.11	1.30	1.30	1.30	1.3
HEIGHT 2 (mm)	28.2	33.0	33.0	33.0	33.0
HEX RANGE FROM	3/4"/19mm	1"/27mm	1 7/8"/49mm	2 3/16"/55mm	3 1/8"/80mm
HEX RANGE TO	2 9/16"/65mm	3 1/8"/80mm	4 5/8"/120mm	5 5/16"/135mm	8"/205mm

*Reference values only. Consult calibration torque chart provided with tool.

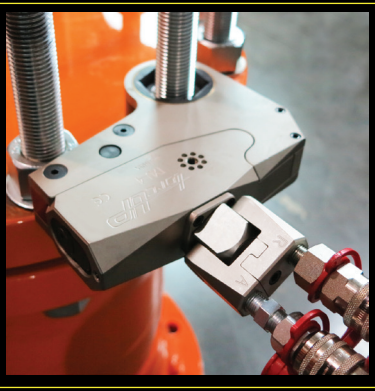

TXU SERIES UNI-SWIVEL LOW PROFILE HYDRAULIC TORQUE WRENCH

ADAPT - IN CONFINED AREAS
ADJUST - AROUND 360 DEGREES
ANTICIPATE - ALL POSITIONAL OBSTRUCTIONS

LOW POINT REACTION PADDLE

BOX END SPANNER WRENCH

INLINE REACTION ARM

HEX TO SQUARE DRIVE ADAPTER

TOOL HANDLE

HEX REDUCER

CARRYING CASE
*Sold seperately.

TXU SERIES

Made In USA

Five Models From 240 lbf-ft to 38,100 lbf-ft

Every Unit Calibrated In ISO17025 Laboratory

Manufactured With AQ Certified Alloys

Genuine TorcUP Design

WORLDWIDE HEADQUARTERS
1025 CONROY PLACE
EASTON, PA 18040 USA
TOLL FREE: 1-888-TORCUP-1
TELEPHONE: 1-610-250-5800
FAX: 1-610-250-2700

WWW.TORCUP.COM

SCAN FOR MORE INFO:

TorcUP products are subject to continual development and TorcUP reserves the right to make changes to the specifications and design of their products without prior notice. All rights are reserved. Reproduction in whole or in part without permission of TorcUP Inc. is prohibited.