torcUP™

EXTENDING YOUR REACH

RP/VT INTEGRAL EXTENSION

RP E6

MODEL NUMBER	RP-1000E6
SQUARE DRIVE	3/4"
MIN. TORQUE (LBF-FT)	148
MAX. TORQUE (LBF-FT)	1030
MIN. TORQUE (NM)	201
MAX. TORQUE (NM)	1396
HEIGHT A (IN)	7.89"
HEIGHT A (MM)	200.4
LENGTH B (IN)	14.93"
LENGTH B (MM)	379.2
DIAMETER C (IN)	1.86"
DIAMETER C (MM)	42.2
WEIGHT (LBS) W/ REACTION ARM	15
WEIGHT (KG) W/ REACTION ARM	6.8
MIN. RPM @ 10 PSI	7
MAX RPM @ 70 PSI	15

*Reference values only. Consult calibration torque chart provided with tool.

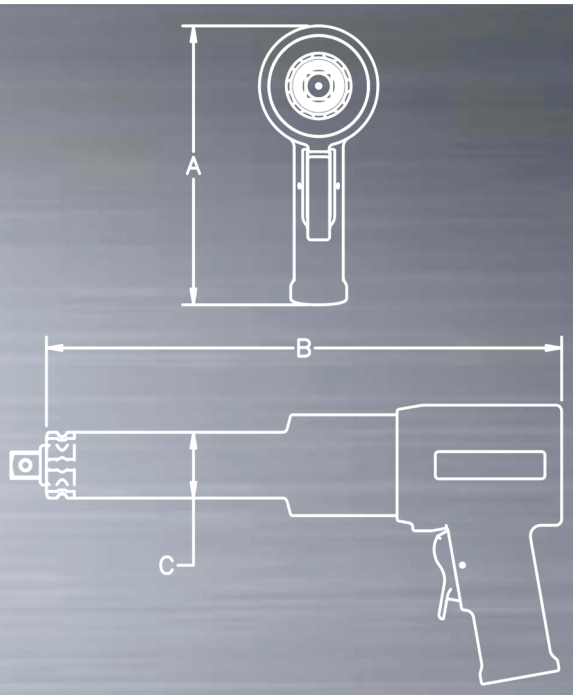

MADE IN USA

VT E6

MODEL NUMBER	VT-1000E6
SQUARE DRIVE	3/4"
MIN. TORQUE (LBF-FT)	240
MAX TORQUE (LBF-FT)	1000
MIN. TORQUE (NM)	330
MAX TORQUE (NM)	1350
HEIGHT A (W/ BATTERY) (IN)	10.54"
HEIGHT A (W/ BATTERY) (MM)	267.7
LENGTH B (IN)	15.63"
LENGTH B (MM)	397.0
DIAMETER C (IN)	1.86"
DIAMETER C (MM)	47.2
WEIGHT (LBS) W/ REACTION ARM	18.5
WEIGHT (KG) W/ REACTION ARM	8.4
MIN. RPM TORQUE	2
MAX RPM TORQUE	8

*Reference values only. Consult calibration torque chart provided with tool.

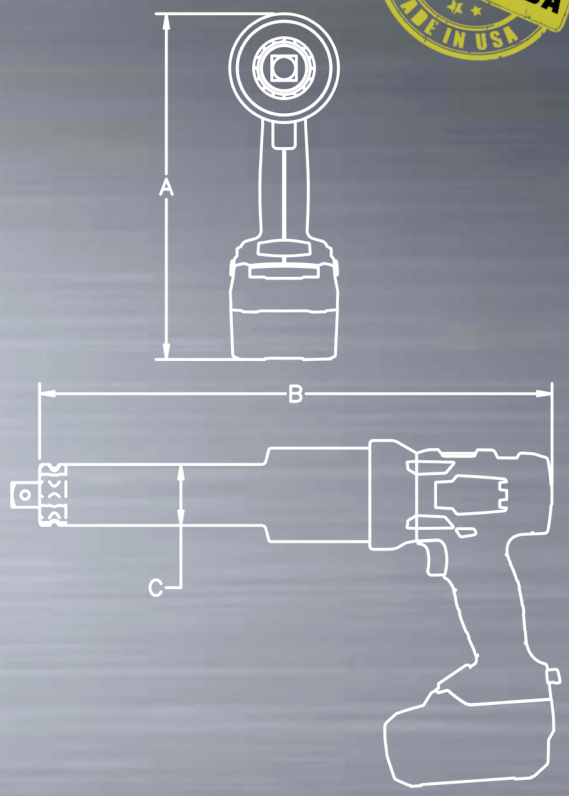

TOLL FREE: 1-888-TORCUP-1
TELEPHONE: 1-610-250-5800
FAX: 1-610-250-2700
EMAIL: SALES@TORCUP.COM

TorcUP Inc. 1025 Conroy Place Easton, PA. 18040 USA | www.torcup.com

TorcUP products are subject to continual development and TorcUP reserves the right to make changes to the specifications and design of their products without prior notice. All rights are reserved. Reproduction in whole or in part without permission of TorcUP Inc. is prohibited.