VTR

torcUP

TAKE CHARGE
OF YOUR BOLTING

VTR BATTERY TORQUE WRENCH

VTR

BATTERY TORQUE WRENCH

ACCURATE. RELIABLE. INDUSTRIAL PERFORMANCE

FROM OUR EXPERIENCE, WE HAVE LEARNED PERFECTION. THE FIRST VOLTA SERIES WRENCH CHANGED EVERYTHING IN THE INDUSTRIAL TORQUE TOOL INDUSTRY. WITH THE VOLTA-R SERIES WE NOW ELEVATE PERFECTION TO A NEW LEVEL. ENGINEERED TO PROVIDE INCREASED TORQUE, INCREASED DURABILITY, INCREASED SPEED WHILE DECREASING WEIGHT. ALL OF THESE WILL PROVIDE THE OPERATOR WITH AN INDUSTRIAL BATTERY TORQUE WRENCH CAPABLE OF COMPLETING YOUR JOB MORE EFFICIENTLY IN EVERY WAY.

WWW.TORCUP.COM

THE POWER INSIDE

1. AMERICAN AQ CERTIFIED ALLOYS
2. O-RINGS SEAL GREASE IN WHILE KEEPING DIRT AND WATER OUT
3. INDUSTRY LEADING ROBUST GEARBOX DESIGN
4. MULTI-STAGE PLANETARY GEAR SYSTEM
5. SMOOTH BALL BEARING ROTATION OF THE GEARBOX HOUSING FOR INDEPENDENT MOVEMENT FROM THE MOTOR HANDLE
6. OPTIONAL SAFETY SWITCH FOR 2 HAND OPERATION (ADD ON)
7. HIGH-EFFICIENCY BRUSHLESS MOTOR
8. ERGONOMIC NYLON HANDLE WITH A DURABLE SLIP-RESISTANT OVERMOLD
9. 18V, 8.0 AH LIHD BATTERY WITH WORLDWIDE AVAILABILITY
10. LCD DISPLAY FOR SETTING TORQUE AND ENGINEERING UNITS (LBF-FT/NM)
11. EFFORTLESS CW AND CCW DIRECTIONAL CONTROL
12. FIELD SERVICEABLE-REMOVABLE SQUARE DRIVE
13. OPTIMIZED TOOTH DESIGN FOR ULTIMATE STRENGTH AND LONGEVITY

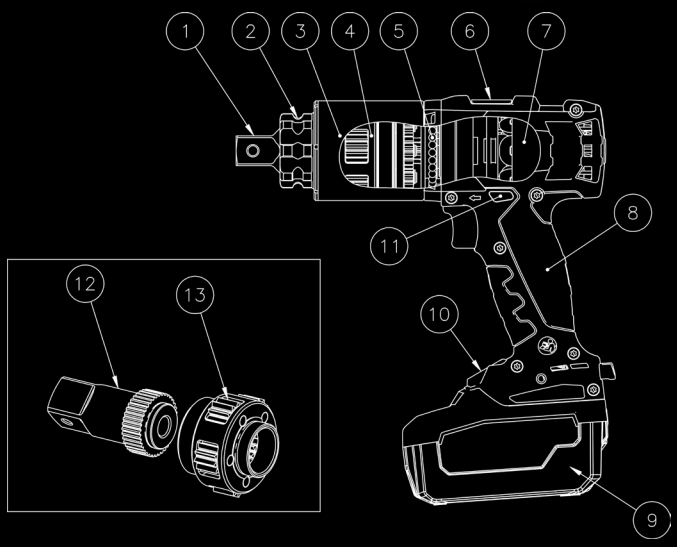

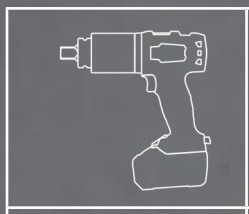

VTR-250
SINGLE SPEED
TORQUE RANGE
60-250 LBF-FT
FREE SPEED
25.75 - 39 RPM

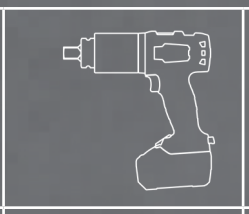

VTR-500
SINGLE SPEED
TORQUE RANGE
80-500 LBF-FT
FREE SPEED
12.25 - 19 RPM

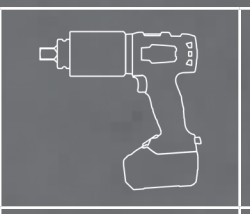

VTR-750-.75/VTR-750
SINGLE SPEED
TORQUE RANGE
100-750 LBF-FT
FREE SPEED
8.4 - 12.5 RPM

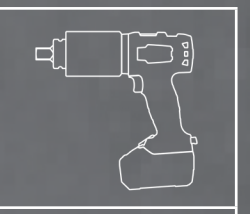

VTR-1000-.75/VTR-1000
SINGLE SPEED
TORQUE RANGE
200-1000 LBF-FT
FREE SPEED
6 - 8.25 RPM

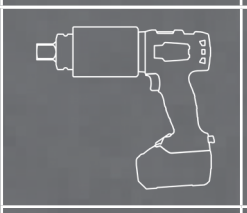

VTR-2000
SINGLE SPEED
TORQUE RANGE
400-2000 LBF-FT
FREE SPEED
3 - 4.75 RPM

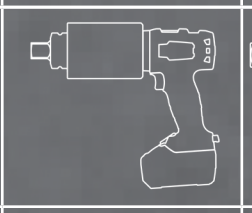

VTR-3000
SINGLE SPEED
TORQUE RANGE
650-3000 LBF-FT
FREE SPEED
2.25 - 3.25 RPM

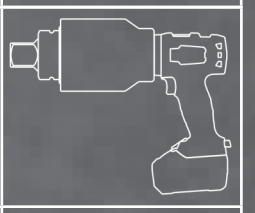

VTR-5000
SINGLE SPEED
TORQUE RANGE
800-5000 LBF-FT
FREE SPEED
1.1 - 1.75 RPM

POWER ENGINEERED

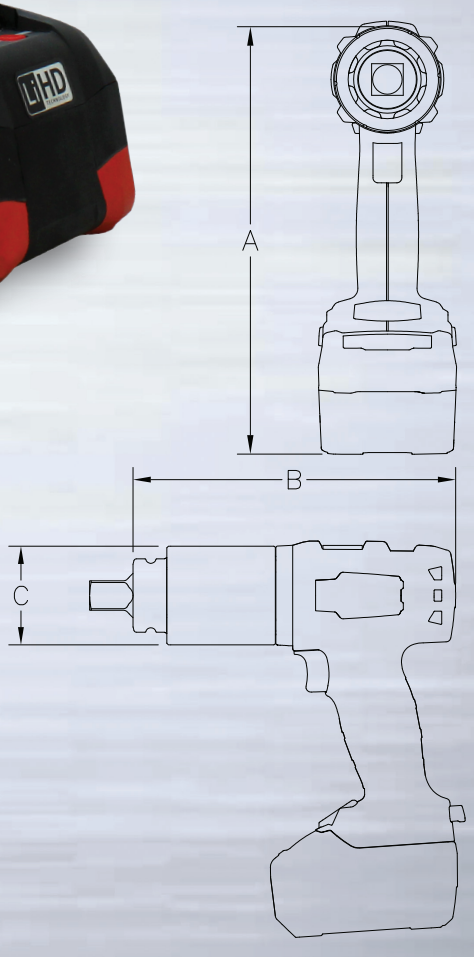

MODEL NUMBER	VTR-250	VTR- 500	VTR-750	VTR-1000
SQUARE DRIVE	3/4″	3/4″	3/4″| 1″	3/4″| 1″
MIN. TORQUE (lbf-ft)	60	80	100	200
MAX TORQUE (lbf-ft)	250	500	750	1000
MIN. TORQUE (Nm)	80	110	140	280
MAX TORQUE (Nm)	340	680	1020	1360
HEIGHT A (w/ battery) (in)	10.04	10.04	10.09	10.09
HEIGHT A (w/ battery) (mm)	255.0	225.0	256.3	256.3
LENGTH B (in)	8.17	8.17	9.18	9.18
LENGTH B (mm)	207.5	207.5	233.2	233.2
DIAMETER C (in)	2.50	2.50	2.85	2.85
DIAMETER C (mm)	63.5	63.5	72.4	72.4
WEIGHT (w/o reaction arm & battery) (lbs)	6.55	6.55	9	9
WEIGHT (w/o reaction arm & battery) (kg)	2.97	2.97	4.08	4.08
WEIGHT (w/ reaction arm & battery) (lbs)	10.85	10.85	14.15	14.15
WEIGHT (w/ reaction arm & battery) (kg)	4.92	4.92	6.42	6.42
RPM at Min. Torque	25.75	12.25	8.4	6
RPM at Max Torque	39	19	12.5	8.25

MODEL NUMBER	VTR-2000	VTR-3000	VTR-5000
SQUARE DRIVE	1″	1″	1 1/2″
MIN. TORQUE (lbf-ft)	400	650	800
MAX TORQUE (lbf-ft)	2000	3000	5000
MIN. TORQUE (Nm)	540	920	1080
MAX TORQUE (Nm)	2710	4070	6780
HEIGHT A (w/ battery) (in)	10.24	10.41	10.91
HEIGHT A (w/ battery) (mm)	260.1	264.4	277.2
LENGTH B (in)	9.75	10.39	11.83
LENGTH B (mm)	247.7	263.9	300.5
DIAMETER C (in)	3.15	3.50	4.50
DIAMETER C (mm)	80.0	88.9	114.3
WEIGHT (w/o reaction arm & battery) (lbs)	11.5	14.35	25.95
WEIGHT (w/o reaction arm & battery) (kg)	5.22	6.51	11.77
WEIGHT (w/ reaction arm & battery) (lbs)	16.65	19.5	36.05
WEIGHT (w/ reaction arm & battery) (kg)	7.55	8.85	16.35
RPM at Min. Torque	3	2.25	1.1
RPM at Max Torque	4.75	3.25	1.75

Charger Requirements: 110 - 120 V (50-60 Hz)
230 - 240 V (50-60 Hz)

VTR SERIES BATTERY-POWERED TORQUE WRENCH

PORTABLE - LITHIUM BATTERY POWER
UNIVERSAL - GLOBAL CHARGING PLATFORM
REPEATABLE - HIGH-EFFICIENCY BRUSHLESS MOTOR

SLIDING STRAIGHT REACTION ARM

STRAIGHT REACTION ARM

LONG EXTENDED REACTION ARM

NOSE EXTENSION

VOLTA CHARGER

VOLTA BATTERY

TOOL CARRYING CASE

WORLDWIDE HEADQUARTERS
1025 CONROY PLACE
EASTON, PA 18040 USA
TOLL FREE: 1-888-TORCUP-1
TELEPHONE: 1-610-250-5800
FAX: 1-610-250-2700
WWW.TORCUP.COM

TorcUP products are subject to continual development and TorcUP reserves the right to make changes to the specifications and design of their products without prior notice. All rights are reserved. Reproduction in whole or in part without permission of TorcUP Inc. is prohibited.